pamar basic

handles with care

indice / index

novità / news 9

maniglie ponte / bridge handles _ MN 37

maniglie barra / bar handles _ MN 75

maniglie incasso / built-in handles _ MN 103

maniglie e pomoli vari / various handles and knobs _ MN / PO 119

maniglie per porte scorrevoli / sliding door handles _ MN 127

pomoli / knobs _ PO 131

ciondoli e chiavi / pendants and keys _ CI/ _ CY / CF 155

finiture / finishings 160

Una storia di persone

Nell'Italia del primo dopoguerra, carico di problemi ma ricco di fermenti ed energie nuove, prende il via la storia di Pamar, una delle aziende oggi di riferimento, a livello mondiale, nella produzione di maniglie e pomoli per mobili. L'impresa nasce e si sviluppa a Renate, in quella parte di Brianza che ben presto verrà riconosciuta come uno dei poli più evoluti nel settore della minuteria metallica e componentistica per mobili.
Pamar é la concretizzazione del progetto di un uomo, Angelo Redaelli, della sua intraprendenza, della sua voglia di fare e di essere protagonista insieme a tanti altri come lui della rinascita del paese. L'imprenditore, accompagnato dal sostegno continuo della moglie Elena che partecipa attivamente allo sviluppo del progetto, debutta nel campo delle maniglie per mobili. Attraverso questo piccolo oggetto di dettaglio, l'azienda decolla, si sviluppa e assume in breve tempo la dimensione e l'impronta di un'industria a tutti gli effetti, nella quale la ricerca costante della qualità diventa una pratica quotidiana, estesa a tutto il processo: dal design e ricerca, alla produzione, alla vendita fino alla comunicazione.
Dopo il successo in Italia, l'espansione di Pamar procede su scala internazionale, grazie alle sue avanzate capacità produttive ed organizzative e soprattutto, al sostanziale contributo dei figli del fondatore, Fabio, Marco e Silvia, che sanno garantire un passaggio generazionale fondato sugli stessi valori e perseguito con il medesimo entusiasmo.

A story of people

In the early years after the war, Italy was weighed down with problems but had a wealth of new energy and ideas; those were the circumstances which saw the birth of Pamar, today one of the most important manufacturers of knobs and handles for furniture. The business was founded and developed in Renate, in that part of the Brianza area which would very soon become well known as an advanced centre for small metal parts and furniture components.
Pamar is the realization of the dream of one man, Angelo Redaelli, the result of his entrepreneurial abilities and hard work, and his desire to participate in the rebirth of his country. This man, with the unflagging support of his wife Elena, who took an active part in building up the business, started out in the field of furniture handles. From its beginnings with this small component, the company expanded rapidly and in a short space of time developed into a full-scale industry in which the drive for quality became a daily constant throughout the whole business: from research and design to manufacturing to marketing and sales.
After achieving success in Italy, Pamar expanded internationally thanks to its advanced manufacturing and organizational capabilities and, above all, the efforts of the founder's children, Fabio, Marco and Silvia, who were able to effect generational change while holding fast to the same values and bringing the same enthusiasm to the task.

Salvatore Li Perni operatore pressofusione

Leonardo Giacone coordinatore pressofusione

Ban Labrador operatore vibrofinitura

Teresa Franzè operatrice assemblaggio

Andrea Terrazzan responsabile di manutenzione

Un'azienda di persone

Due sono le unità produttive all'interno delle quali Pamar realizza l'intero processo produttivo: dal procedimento di stampaggio, alla pulitura e verniciatura, alla rifinitura e assemblaggio, al rigoroso controllo dei trattamenti superficiali, dei pezzi meccanici e, infine, di ogni singola maniglia: perché la qualità non sia solo una parola ma un risultato concreto, da toccare con mano. Un'attenzione del tutto particolare viene rivolta alle possibili finiture delle maniglie, con prove severissime come l'immersione in "nebbia salina", la resistenza ai solventi, il controllo micron di spessore. Il tutto con la collaborazione di laboratori certificati, riconosciuti a livello europeo.
Se molte sono le energie e le risorse impegnate per avere una fabbrica sempre tecnologicamente avanzata, altrettante sono quelle impiegate per dare sicurezza a chi nella fabbrica ci lavora: perché per Pamar é soprattutto l'uomo a rappresentare la prima risorsa da tutelare e far crescere, per garantire la qualità d'impresa in ogni suo aspetto.
E anche l'ambiente é rispettato e salvaguardato con grande cura e serietà, attraverso impianti all'avanguardia che depurano l'acqua impiegata nei cicli di lavorazione e l'aria che si respira all'interno degli stabilimenti; impianti controllati costantemente, di cui l'azienda si é dotata tra le prime sul territorio.

A company made up of people

Pamar has two production facilities covering the entire manufacturing process: from pressing to buffing and painting, to finishing and assembly, to rigorous quality control of surface treatments and the mechanical components, and lastly the checking of each single handle: because quality is not just a word, but a concrete tangible result. Special attention is paid to the finish on the handles, with very rigorous tests like immersion in "salty mist", resistance to solvents, and the checking of measurements down to the micron level.
All this is done in laboratories with European certification.Much effort and many resources are expended in ensuring the manufacturing facilities are at the forefront of technology, but just as much effort is put into guaranteeing the safety of those who work in the factory: because in Pamar's view, human resources, above all, are those which must be protected and allowed to develop so as to guarante e quality in all aspects of the business.
The environment, too, must be respected and carefully safeguarded. To this end, Pamar has advanced purification equipment for the water used in manufacturing and for the ambient air in the factories; this equipment, which is constantly checked, was amongst
the first of its kind to be installed in the area.

Gordon Guillaumier

Marco Zanuso Jr.

Lino Codato

Pinuccio Borgonovo

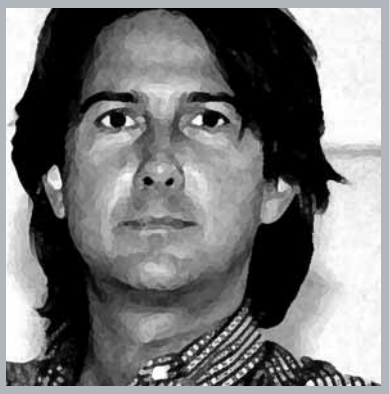

Giuseppe Bavuso

Il design, un valore

Per chi, come Pamar, ha fatto della ricerca e della sperimentazione un tratto caratteristico della sua storia, é stato altrettanto naturale considerare il design un elemento fondamentale di distinzione e di costruzione della propria identità.
E' dagli anni novanta che l'azienda comincia a lavorare a stretto contatto con numerosi architetti e designers, con personalità progettuali e linguaggi espressivi diversi .
Grazie a loro, Pamar studia e sperimenta sempre nuove forme, applica nuovi materiali e nuove finiture costruendo una collezione fortemente caratterizzata: una selezione di oltre quattrocento diverse tipologie di maniglie, a ponte, barra, incasso, pomoli e ciondoli, interpretate con estetiche molteplici e con una grande varietà di finiture, capaci di rispondere in modo diversificato e innovativo alle esigenze e ai desideri della propria clientela. Pamar oggi conosce a fondo il mondo dell'arredamento a livello internazionale: sa cogliere, anticipare e soddisfare i bisogni sfaccettati dei protagonisti di questo settore. Per questo può proporsi non solo come semplice fornitore di componenti ma come vero e proprio partner per le aziende produttrici di mobili di design. A queste Pamar é in grado di offrire prodotti a forte contenuto progettuale, dal design ricercato e inconfondibile, realizzati interamente in Italia e garantiti integralmente. Per Pamar il design non é un semplice attributo, é il valore che esprime e sottolinea la sua realtà.

Design as a core value

For a company like Pamar, which has made research and experimentation a way of life, it comes naturally to consider design a fundamental element whereby it differentiates itself and affirms its own identity.
Since the nineties, the company has worked closely with numerous architects and designers, each of whom represents a different professional personality and form of artistic expression. Thanks to them, Pamar is constantly studying and experimenting with new shapes, making use of new materials and new finishes, to build up a very distinctive collection: a selection of over 400 different types of handles, bridge, bar and recessed handles, knobs and pendants, interpreted in multiple aesthetic styles and with a wide variety of finishes. These products meet the requirements and desires of customers in diverse, innovative ways. Pamar has a profound knowledge of the furniture market internationally: it understands, foresees and satisfies the multi-faceted needs of the leaders in this sector. For this reason, it may be seen not only as simply a supplier of components but as a true partner for manufacturers of designer furniture. Pamar offers them products with a strong design component, products of refined and unmistakeable design, entirely Italian-made and fully guaranteed. For Pamar, design is not just a simple attribute, it is a value which expresses and underpins its existence.

Fabio Redaelli

Jo Coenen

Alessandro Elli

Sung Sook Kim

Klaus Bergen

Silvano Barsacchi

G.Vittorio Plazzogna

Luigi Vaghi

Alessandro Piva

Made Expo stand Pamar, progetto/project: Gordon Guillaumier con/with studio Dalloli, Milano 2009

news

MN 2102 Z

Design
Gordon Guillaumier

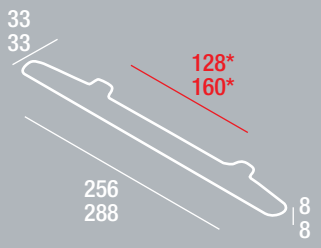

Finiture Finishings	Eps Epoxy Coatings	Applicazioni Applications
G104	E1	
G124	E9	

MN 2133Z

Design
Gordon Guillaumier

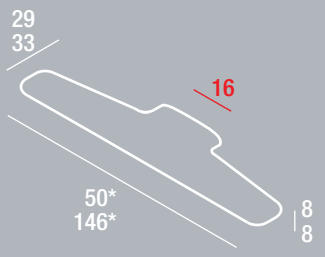

Finiture Finishings	Eps Epoxy Coatingss	Applicazioni Applications
G104	E1	
G124	E9	

MN 2103 Z

Design
Gordon Guillaumier

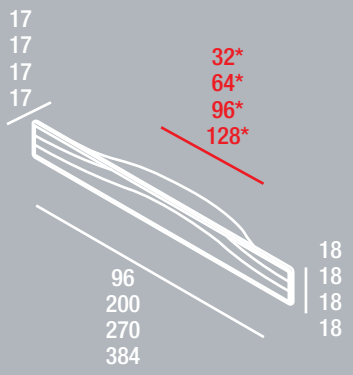

Finiture Finishings	Eps Epoxy Coatings	Applicazioni Applications
G104	E1	
G124	E9	

MN 2106 O

Design
Alessandro Elli

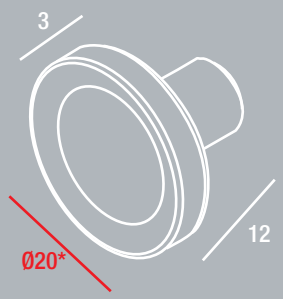

Finiture Finishings	Eps Epoxy Coatings	Applicazioni Applications
G104	E10	
G115	E11	

MN 2082 Z

Design
Pinuccio Borgonovo

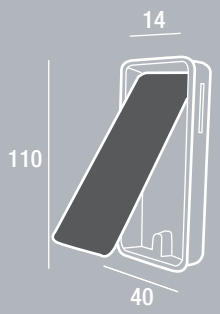

dispobile anche senza applicazione
available also without application

Finiture Finishings	Eps Epoxy Coatings	Applicazioni Applications
G104	E10	U1
G115	E11	

MN 2048 Z

Design
Pinuccio Borgonovo

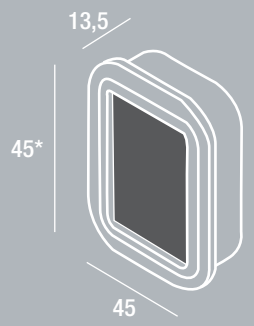

disponibile anche senza applicazione
available also without application

Finiture Finishings	Eps Epoxy Coatings	Applicazioni Applications
G104	E10	U1
G115	E11	

MN 2019 Z

Design
Giuseppe Bavuso

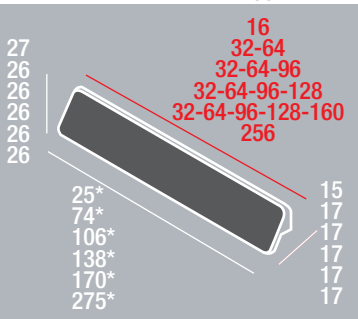

interasse multiplo

disponibile anche
senza applicazione

multiple inter-axial
hole distance
available also
without application

Finiture Finishings	Eps Epoxy Coatings	Applicazioni Applications
G104	E1	U1
G115	E9	

MN 2098 Z

Design
Silvano Barsacchi

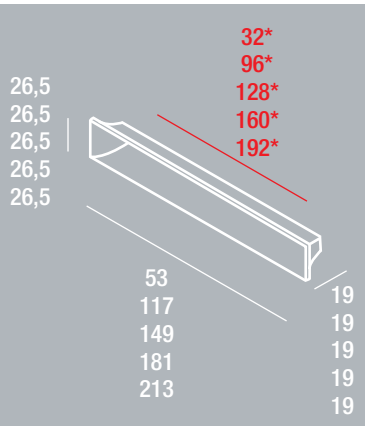

Finiture Finishings	Eps Epoxy Coatings	Applicazioni Applications
G104	E1	
	E9	

MN 2096 Z

Design
Giuseppe Bavuso

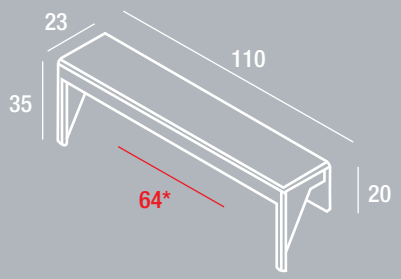

Finiture Finishings	Eps Epoxy Coatings	Applicazioni Applications
G115	E10	
	E11	

MN 2094 Z

Design
CRP

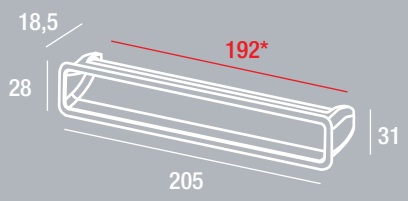

Finiture Finishings	Eps Epoxy Coatings	Applicazioni Applications
G104	E10	
	E11	

MN 2104 Z

Design
Gordon Guillaumier

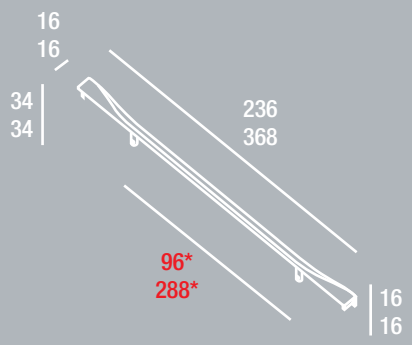

Finiture Finishings	Eps Epoxy Coatings	Applicazioni Applications
G104	E10	
G124	E11	

MN 2079Z

Design
CRP

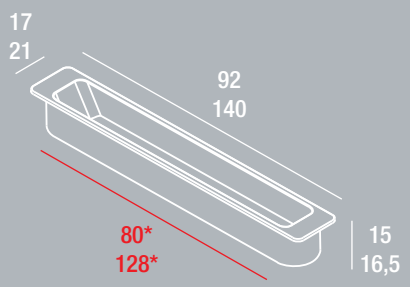

Finiture Finishings	Eps Epoxy Coatings	Applicazioni Applications
G171	E10	
	E11	

MN 2068 Z

Design
CRP

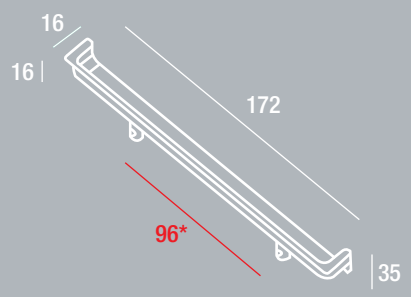

Finiture Finishings	Eps Epoxy Coatings	Applicazioni Applications
G104	E10	
	E11	

MN 2101 Z

Design
CRP

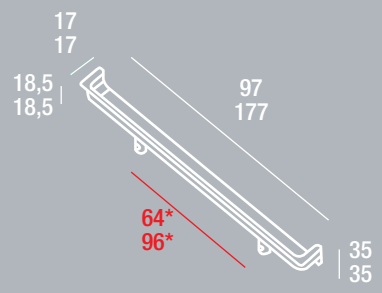

Finiture Finishings	Eps Epoxy Coatings	Applicazioni Applications
G104	E10	
	E11	

MN 1082 Z

Design
Giuseppe Bavuso

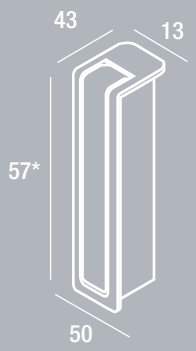

Finiture Finishings	Eps Epoxy Coatings	Applicazioni Applications
G115	E1	
	E9	

MN 2021 Z

Design
Silvano Barsacchi

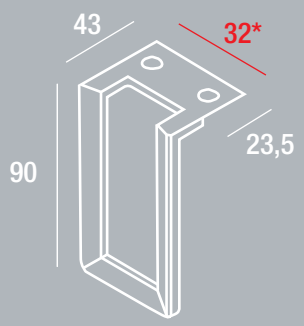

Finiture Finishings	Eps Epoxy Coatings	Applicazioni Applications
G104	E1	
	E9	

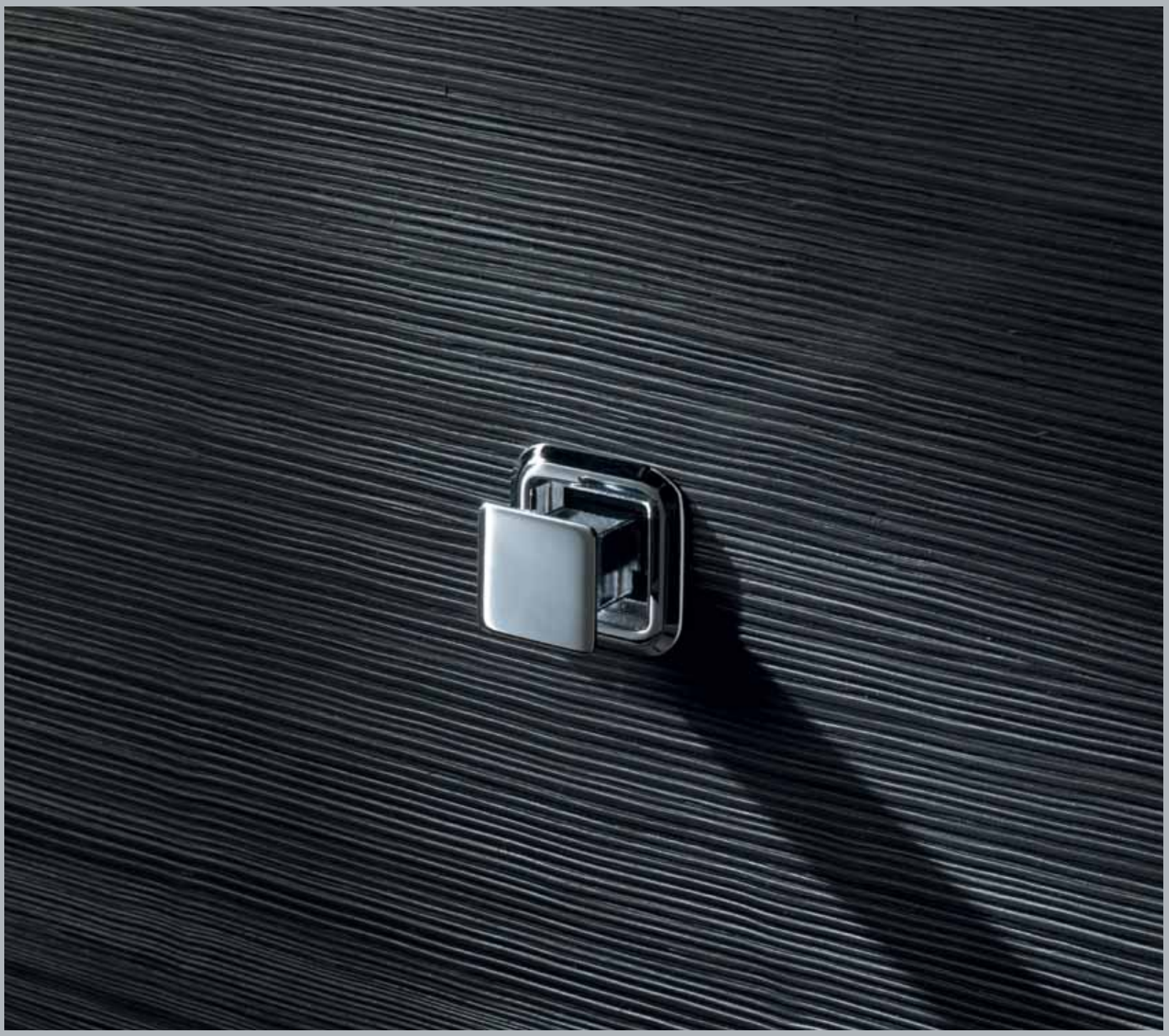

PO 2006 Z

Design
CRP

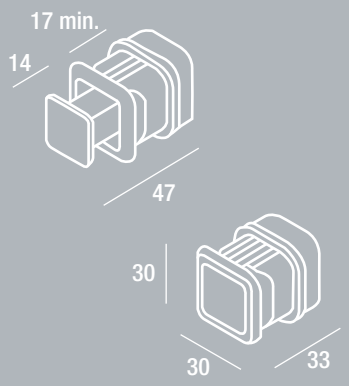

Finiture Finishings	Eps Epoxy Coatings	Applicazioni Applications
G104	E1	
G115	E9	

PO 2015 Z

Design CRP	Finiture Finishings	Eps Epoxy Coatings	Applicazioni Applications
	G104	E1	
	G115	E9	

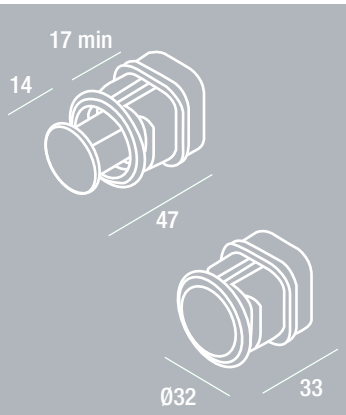

MN 2108 Z

Design
Alessandro Elli

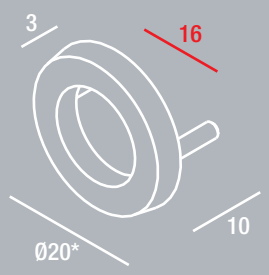

Finiture Finishings	Eps Epoxy Coatings	Applicazioni Applications
G104	E10	
G115	E11	

MN 2109 Z

Design
Alessandro Elli

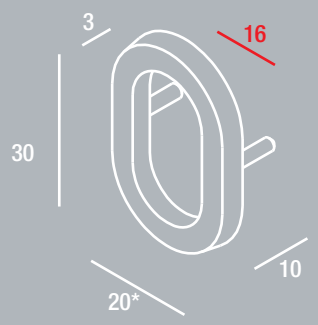

Finiture Finishings	Eps Epoxy Coatings	Applicazioni Applications
G104	E10	
G115	E11	

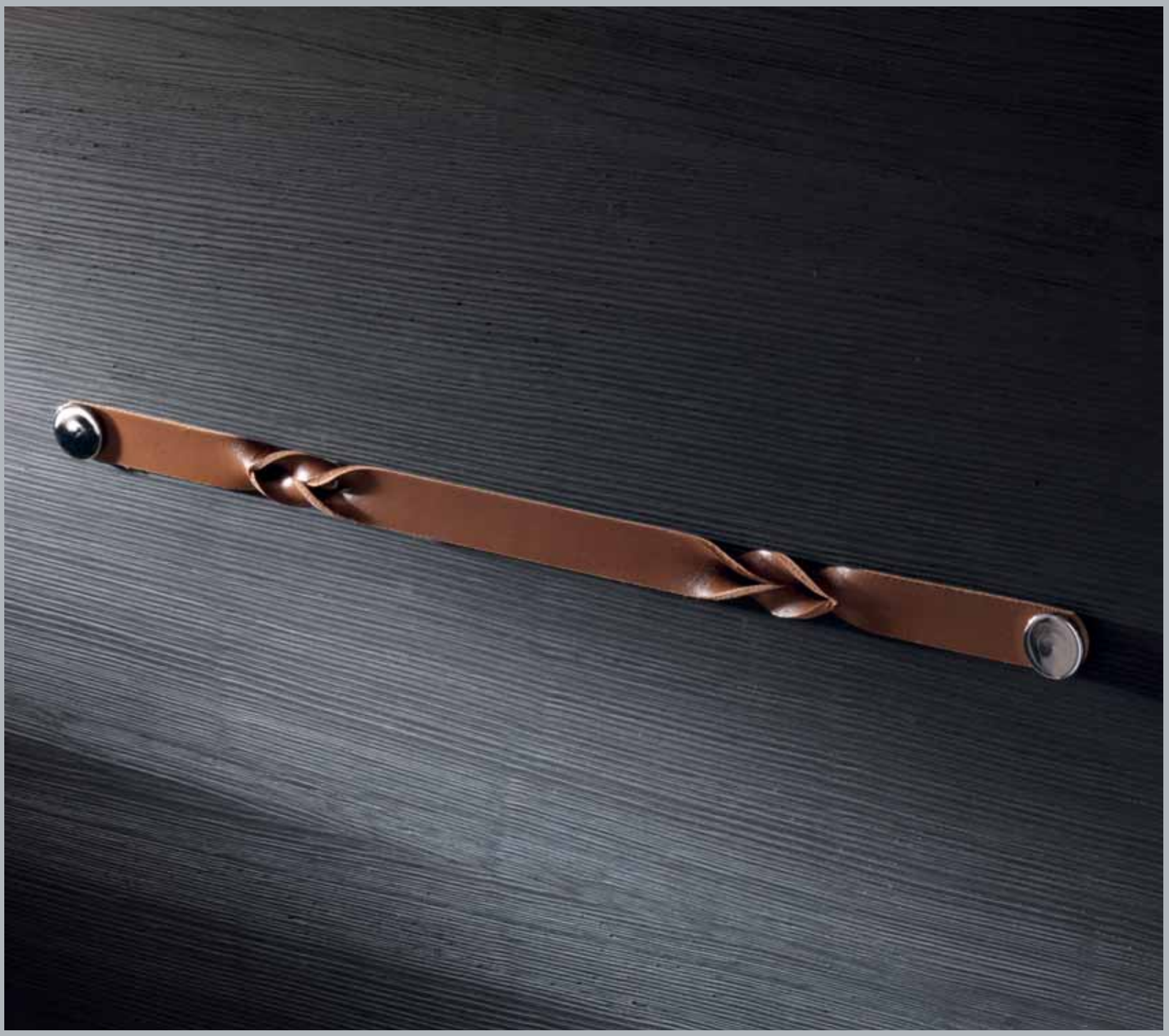

MN 2026 O

Design
Sung Sook Kim

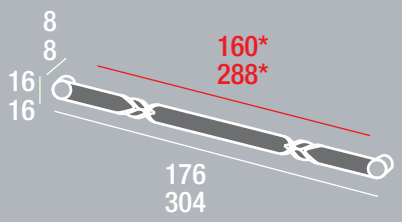

Finiture Finishings	Eps Epoxy Coatings	Applicazioni Applications
G104	E1	U1
G115	E9	

MN 2026 O

Design
Sung Sook Kim

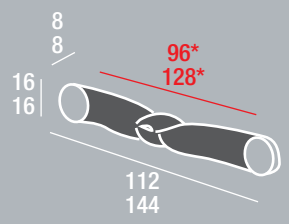

Finiture Finishings	Eps Epoxy Coatings	Applicazioni Applications
G104	E1	U1
G115	E9	

MN 2025 Z

Design
Sung Sook Kim

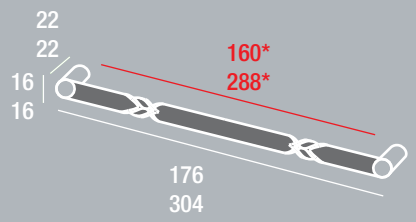

Finiture Finishings	Eps Epoxy Coatings	Applicazioni Applications
G104	E1	U1
G115	E9	

MN 2025 Z

Design
Sung Sook Kim

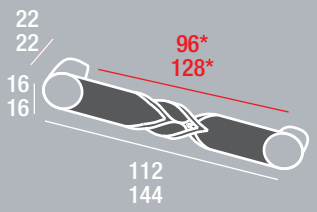

Finiture Finishings	Eps Epoxy Coatings	Applicazioni Applications
G104	E1	U1
G115	E9	

CI 224 Z

Design
Sung Sook Kim

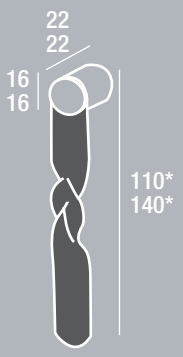

Finiture Finishings	Eps Epoxy Coatings	Applicazioni Applications
G104	E1	U1
G115	E9	

CI 225 O

Design
Sung Sook Kim

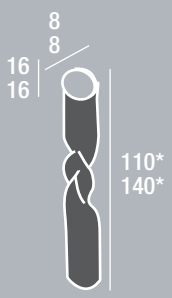

Finiture Finishings	Eps Epoxy Coatings	Applicazioni Applications
G104	E1	U1
G115	E9	

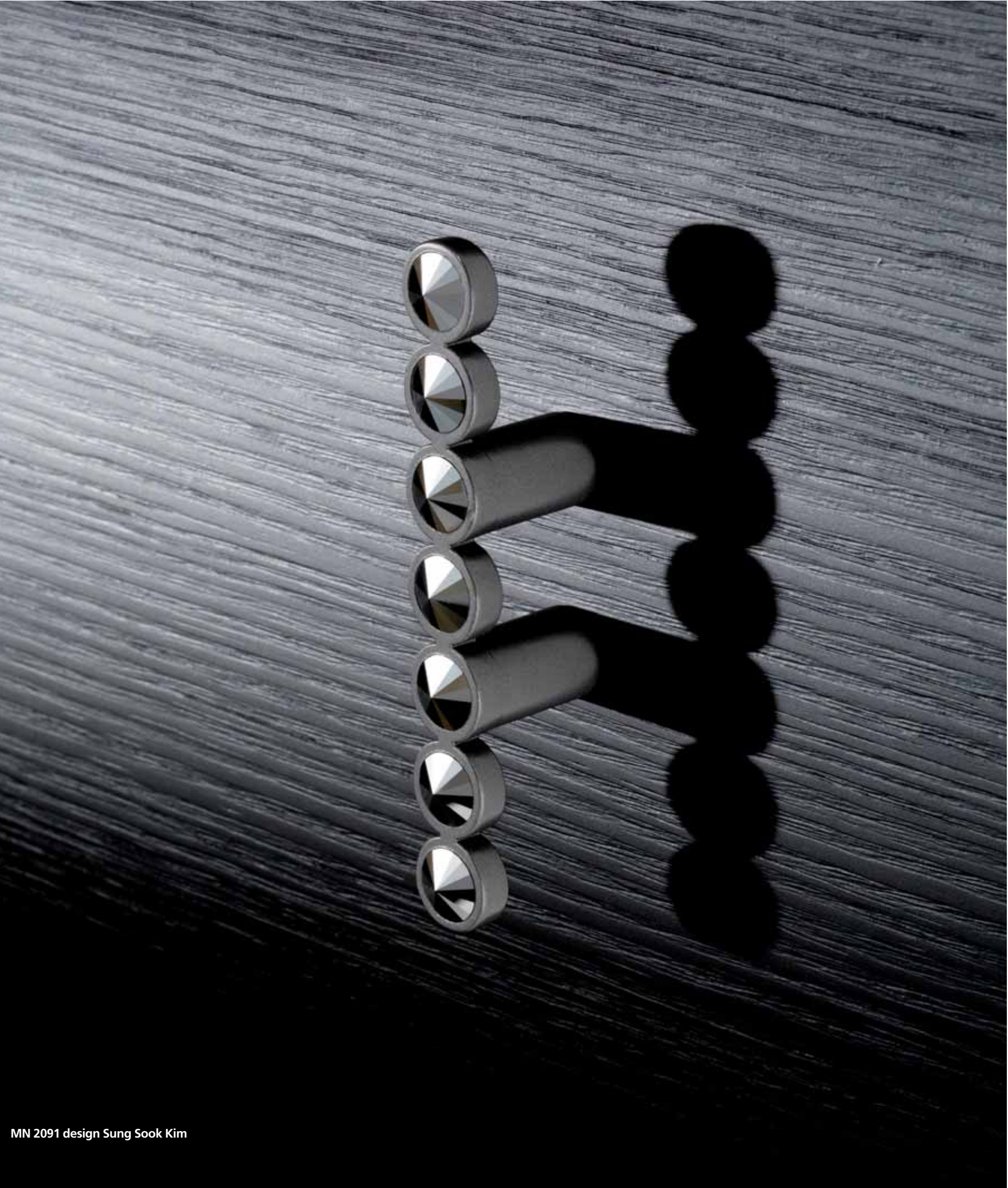

MN 2091 design Sung Sook Kim

maniglie ponte. bridge handles

MN 2077 Z
Design Alessandro Elli

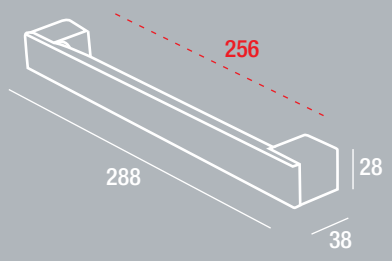

Finiture Finishings	Eps Epoxy Coatings	Applicazioni Applications
G104	E1	L1
G115		L2

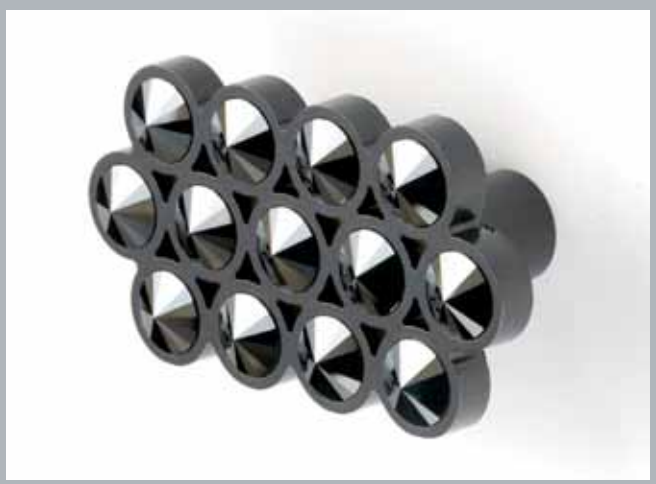

MN 2078 Z
Design Sung Sook Kim

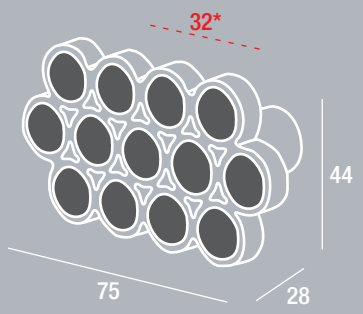

Finiture Finishings	Eps Epoxy Coatings	Applicazioni Applications
G104	E1	C1
G140	E9	C2
G174		
GP008		

MN 2091 Z
Design Sung Sook Kim

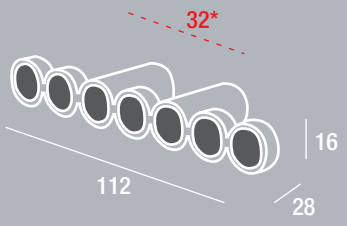

Finiture Finishings	Eps Epoxy Coatings	Applicazioni Applications
G104	E1	C1
G140	E9	C2
G174		
GP008		

MN 1087 Z
Design Marco Zanuso J.

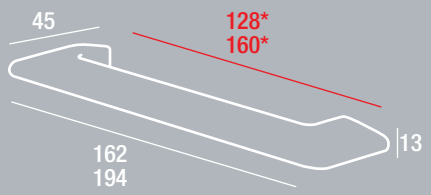

Finiture Finishings	Eps Epoxy Coatings	Applicazioni Applications
G104		
G172		
G124		

MN 1145 Z

Design Gordon Guillaumier

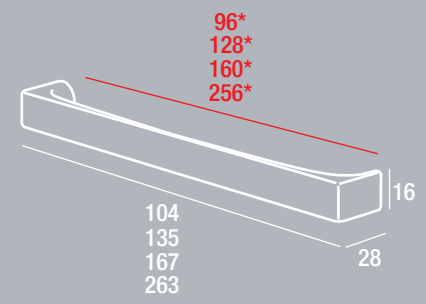

Finiture Finishings	Eps Epoxy Coatings	Applicazioni Applications
G104	E1	
G115	E9	

MN 1166 Z

Design Klaus Bergen

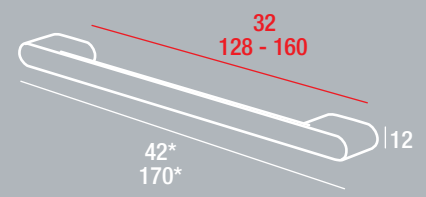

interasse multiplo
multiple inter-axial
hole distance

Finiture Finishings	Eps Epoxy Coatings	Applicazioni Applications
G104	E1	
G115	E9	

MN 1150 Z

Design CRP

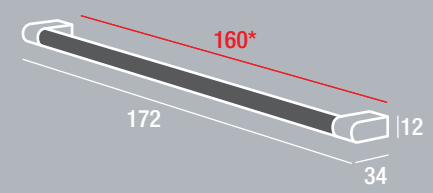

misure su richiesta size on request

Finiture Finishings	Eps Epoxy Coatings	Applicazioni Applications
G104	E1	G104
G115		G115
		E1

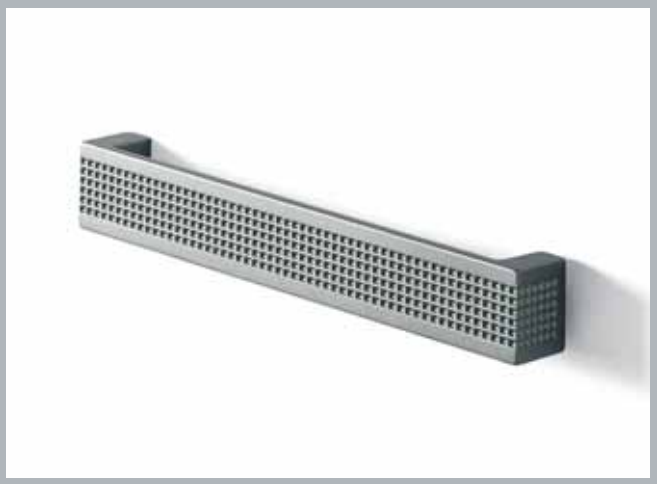

MN 1129 Z

Design Gino Brini

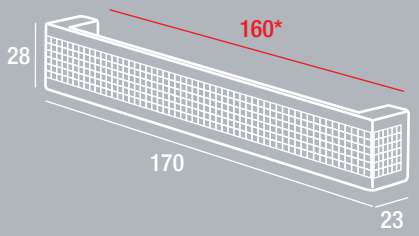

Finiture Finishings	Eps Epoxy Coatings	Applicazioni Applications
G104	E1	
G115	E9	

MN 1088 Z

Design
Marco Zanuso Jr.

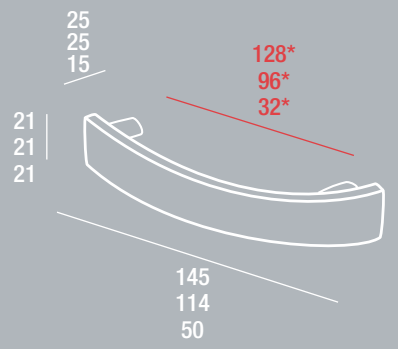

Finiture Finishings	Eps Epoxy Coatings	Applicazioni Applications
G104	E1	
G115	E9	

MN 1047 Z

Design
Gordon Guillaumier

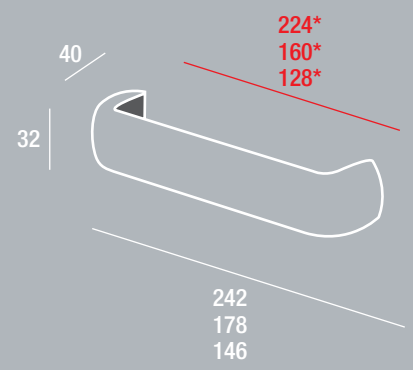

Finiture Finishings	Eps Epoxy Coatings	Applicazioni Applications
G104	E1	E1
G115	E9	E9

MN 1048 Z

Design
Gordon Guillaumier

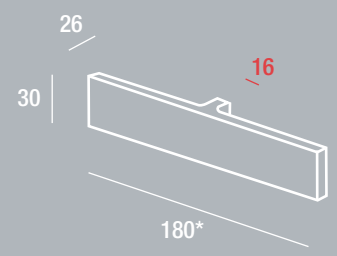

Finiture Finishings	Eps Epoxy Coatings	Applicazioni Applications
G104	E1	
G115	E9	

MN 1045 Z

Design
Gordon Guillaumier

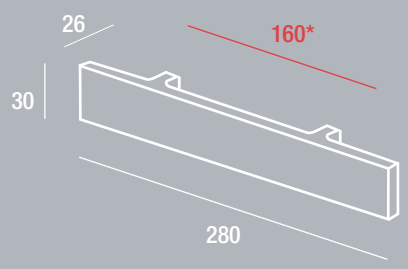

Finiture Finishings	Eps Epoxy Coatings	Applicazioni Applications
G104	E1	
G115	E9	

MN 1033 Z

Design G.Vittorio Plazzogna

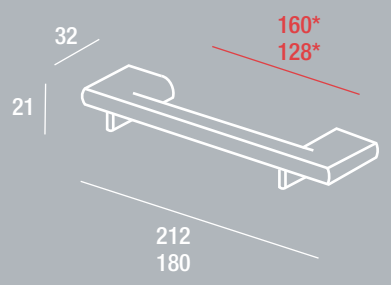

Finiture Finishings	Eps Epoxy Coatings	Applicazioni Applications
	E1	
	E9	

MN 1042 Z

Design Gordon Guillaumier

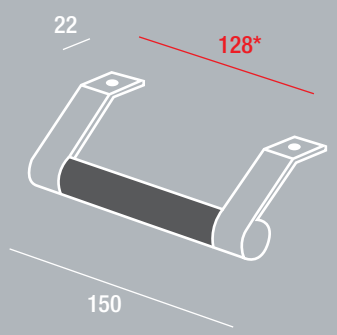

misure su richiesta size on request

Finiture Finishings	Eps Epoxy Coatings	Applicazioni Applications
G104	E1	E1
G115	E9	E9
		G104
		G115

MN 1061 Z

Design Gordon Guillaumier

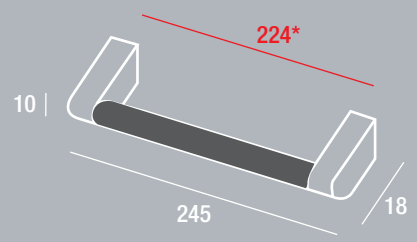

misure su richiesta size on request

Finiture Finishings	Eps Epoxy Coatings	Applicazioni Applications
G104	E1	E1
G115	E9	E9
		G104
		G115

MN 1044 Z

Design Gordon Guillaumier

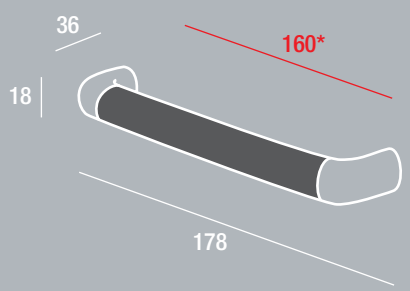

Finiture Finishings	Eps Epoxy Coatings	Applicazioni Applications
G104	E1	E1
G115	E9	E9
		G104
		G115
		L1
		L2

MN 1044 Z

Design
Gordon Guillaumier

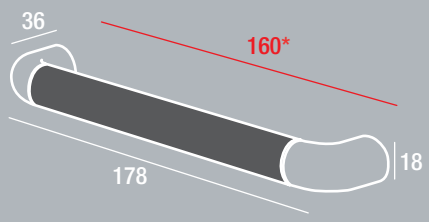

misure su richiesta size on request

Finiture Finishings	Eps Epoxy Coatings	Applicazioni Applications
G104	E1	E1
G115	E9	E9
		G104
		G115
		L1
		L2

MN 1000 Z

Design
Fabio Redaelli

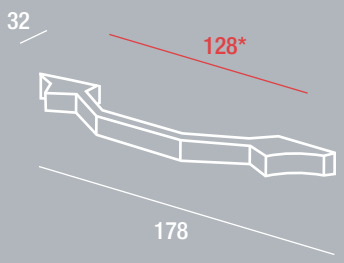

Finiture Finishings	Eps Epoxy Coatings	Applicazioni Applications
G115	E1	
	E9	

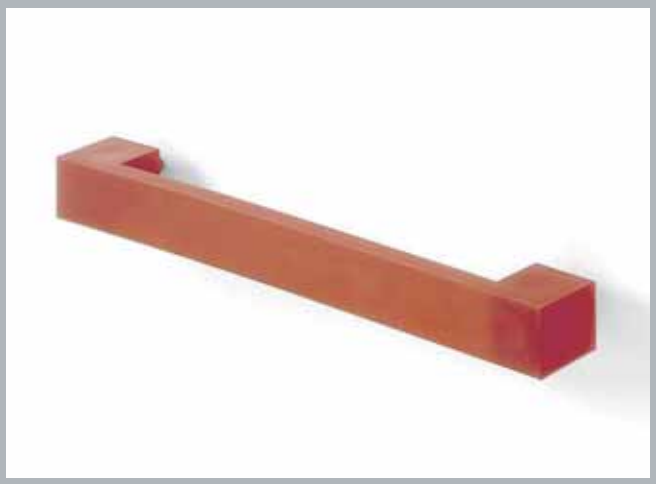

MN 836 A

Design
Fabio Redaelli

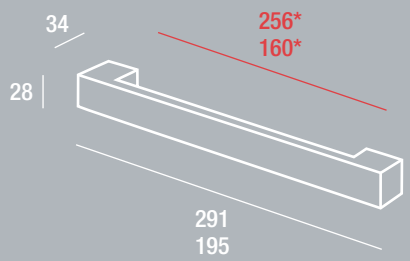

Finiture Finishings	Eps Epoxy Coatings	Applicazioni Applications
A13		

MN 836 Z

Design
Fabio Redaelli

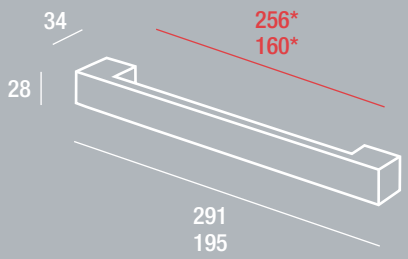

Finiture Finishings	Eps Epoxy Coatings	Applicazioni Applications
G115	E10	
	E11	

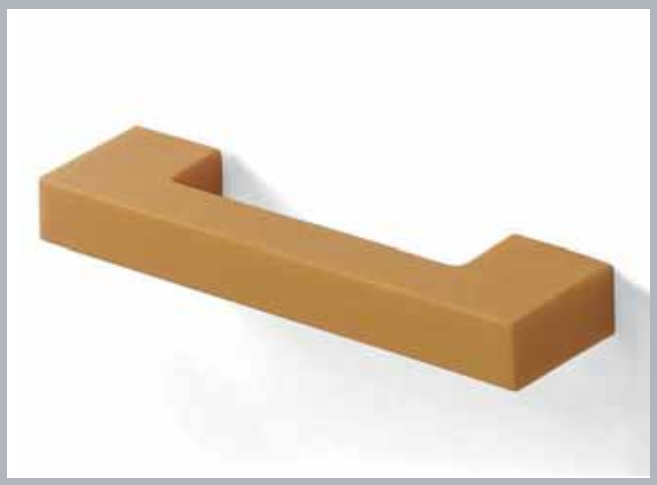

MN 883 G

Design CRP

Finiture Finishings	Eps Epoxy Coatings	Applicazioni Applications
O1		

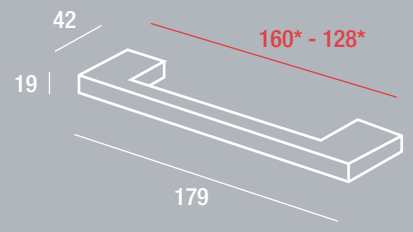

doppio interasse

double inter-axial hole distance

MN 882 Z

Design CRP

Finiture Finishings	Eps Epoxy Coatings	Applicazioni Applications
G104	E1	
G115	E9	

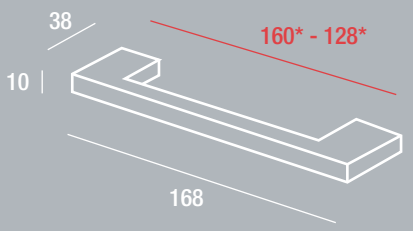

doppio interasse

double inter-axial hole distance

MN 907 Z

Design Marelli e Molteni

Finiture Finishings	Eps Epoxy Coatings	Applicazioni Applications
G171	E1	
G104	E9	

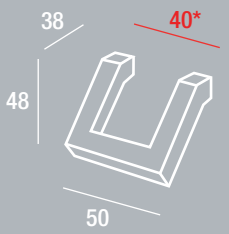

MN 907 Z

Design Marelli e Molteni

Finiture Finishings	Eps Epoxy Coatings	Applicazioni Applications
G171	E1	
G104	E9	

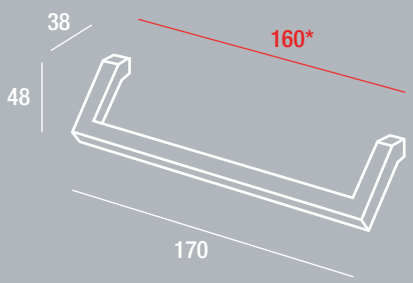

MN 935 Z

Design CRP

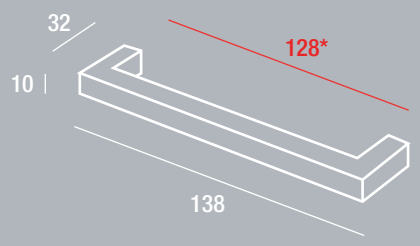

Finiture Finishings	Eps Epoxy Coatings	Applicazioni Applications
G104	E1	
G115	E9	

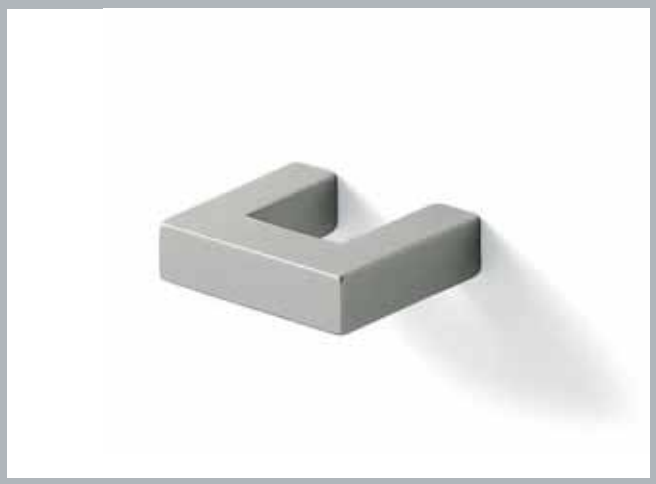

MN 935 Z

Design CRP

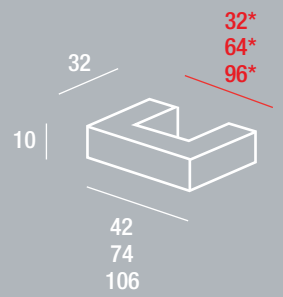

Finiture Finishings	Eps Epoxy Coatings	Applicazioni Applications
G104	E1	
G115	E9	

MN 934 Z

Design CRP

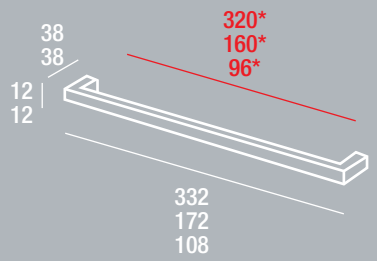

Finiture Finishings	Eps Epoxy Coatings	Applicazioni Applications
G104	E1	
G115	E9	

MN 1071 Z

Design Gordon Guillaumier

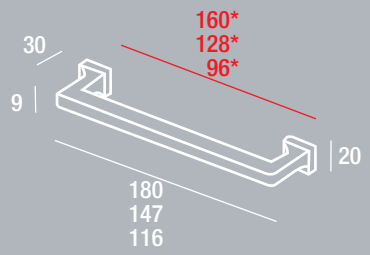

Finiture Finishings	Eps Epoxy Coatings	Applicazioni Applications
G104	E1	
GR024	E9	
G115		

MN 791 Z

Design
Marelli e Molteni

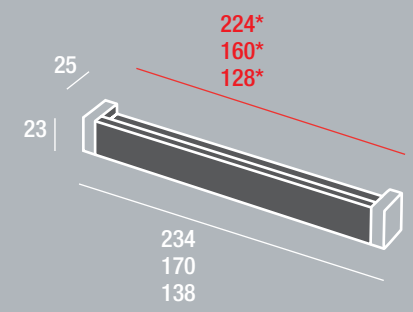

Finiture Finishings	Eps Epoxy Coatings	Applicazioni Applications
G104	E1	A12
G115	E9	

MN 791 Z

Design
Marelli e Molteni

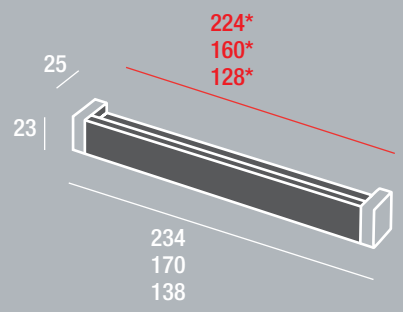

Finiture Finishings	Eps Epoxy Coatings	Applicazioni Applications
G104	E1	L1
G115	E9	L2

misure su richiesta size on request

MN 791 Z

Design
Marelli e Molteni

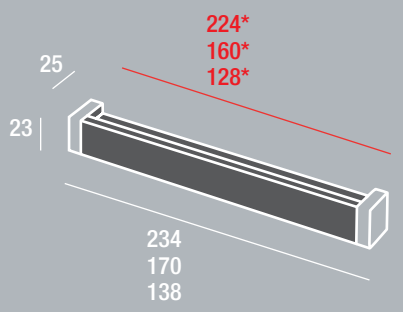

Finiture Finishings	Eps Epoxy Coatings	Applicazioni Applications
G104	E1	I1
G115	E9	E10
	E10	E11
	E11	

misure su richiesta size on request

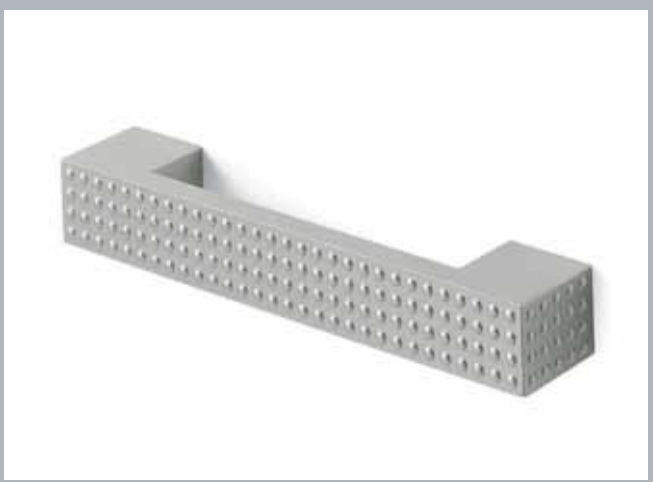

MN 837 Z

Design
Fabio Redaelli

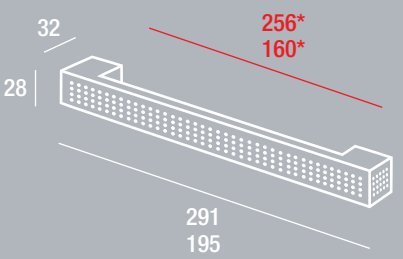

Finiture Finishings	Eps Epoxy Coatings	Applicazioni Applications
	E10	
	E11	

MN 734 Z

Design
Fabio Redaelli

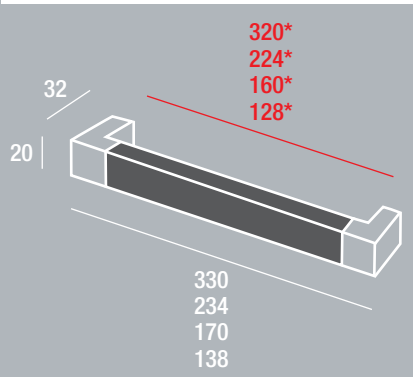

misure su richiesta size on request

Finiture Finishings	Eps Epoxy Coatings	Applicazioni Applications
G104	E1	E10
G115	E9	E11
	E10	I1
	E11	

MN 734 Z

Design
Fabio Redaelli

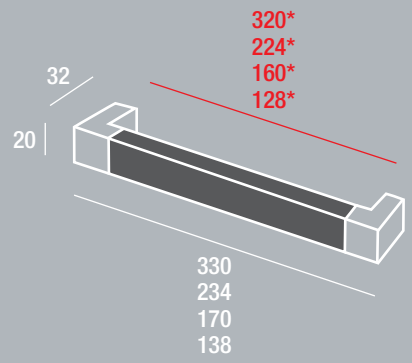

misure su richiesta size on request

Finiture Finishings	Eps Epoxy Coatings	Applicazioni Applications
G104	E1	L1
G115	E9	L2

MN 734 Z

Design
Fabio Redaelli

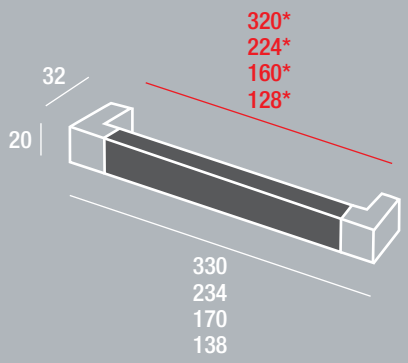

Finiture Finishings	Eps Epoxy Coatings	Applicazioni Applications
G104	E1	A7
G115	E9	A9
		A12
		A17
		A19

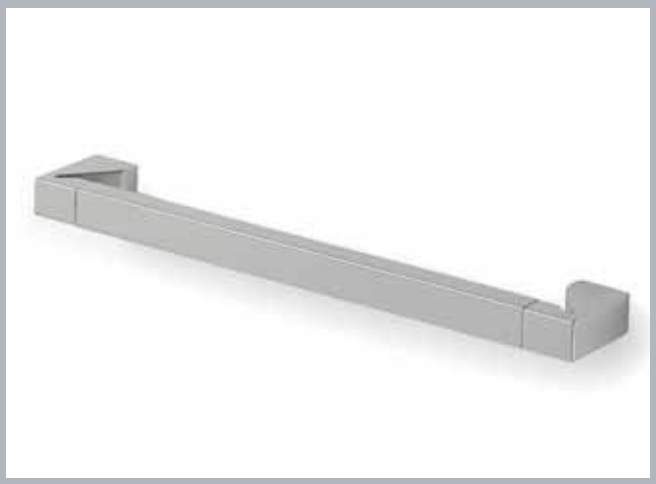

MN 954 I

Design
Lino Codato

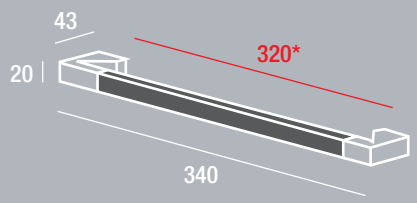

misure su richiesta size on request

Finiture Finishings	Eps Epoxy Coatings	Applicazioni Applications
G115	E10	E10
	E11	E11
		I1
		L1
		L2

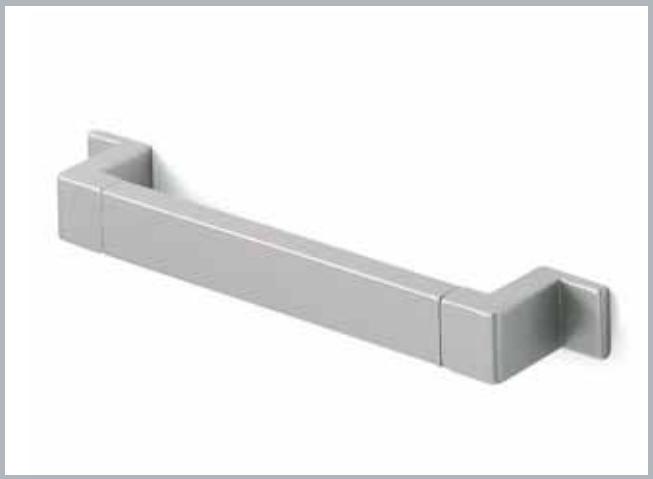

MN 700 Z

Design
Fabio Redaelli

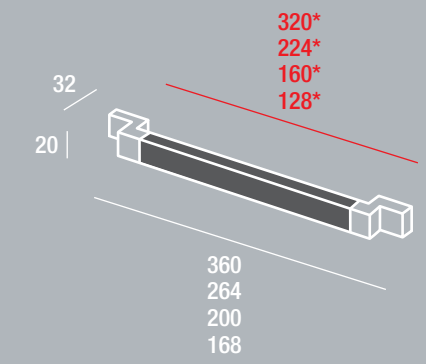

misure su richiesta size on request

Finiture Finishings	Eps Epoxy Coatings	Applicazioni Applications
G104	E1	E10
G115	E9	E11
	E10	I1
	E11	

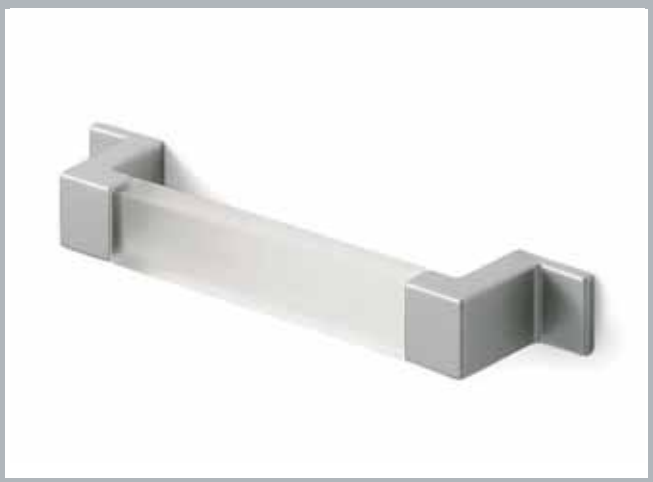

MN 700 Z

Design
Fabio Redaelli

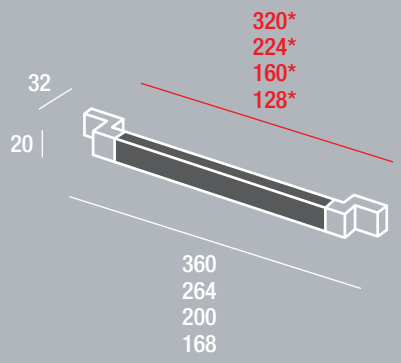

Finiture Finishings	Eps Epoxy Coatings	Applicazioni Applications
G104	E1	A7
G115	E9	A9
		A12
		A17
		A19

MN 700 Z

Design
Fabio Redaelli

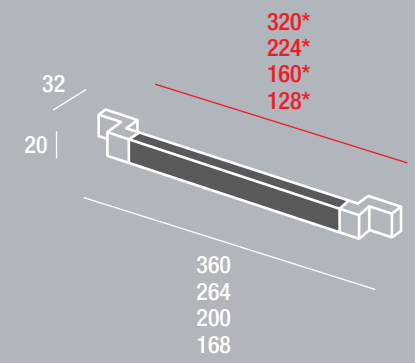

misure su richiesta size on request

Finiture Finishings	Eps Epoxy Coatings	Applicazioni Applications
G104	E1	L1
G115	E9	L2

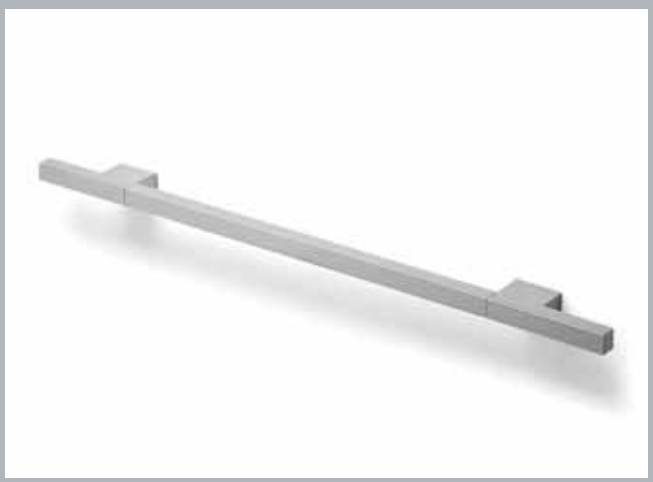

MN 940 Z

Design
Marelli e Molteni

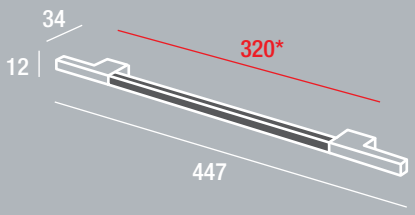

misure su richiesta size on request

Finiture Finishings	Eps Epoxy Coatings	Applicazioni Applications
G104	E1	E1
G115	E9	E9
	E10	E10
	E11	E11
		G104
		G115

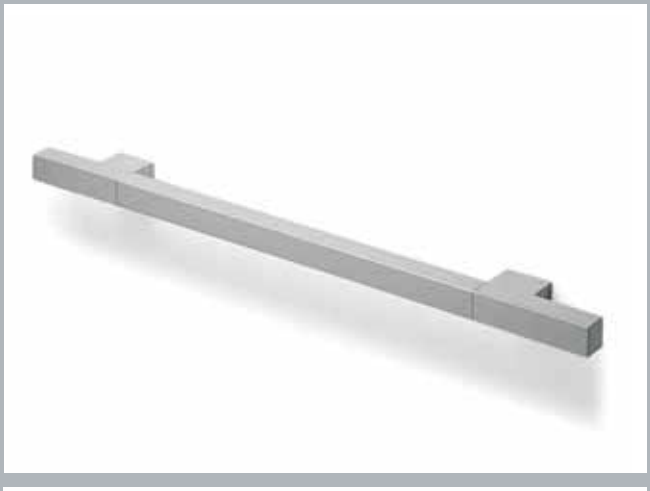

MN 941 Z

Design
Marelli e Molteni

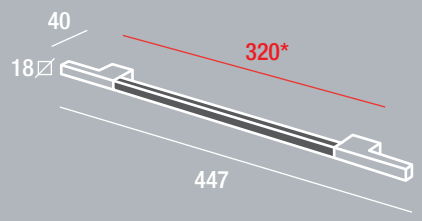

misure su richiesta size on request

Finiture Finishings	Eps Epoxy Coatings	Applicazioni Applications
G104	E1	E1
G115	E9	E9
	E10	E10
	E11	E11
		G104
		G115

MN 948 I

Design
Lino Codato

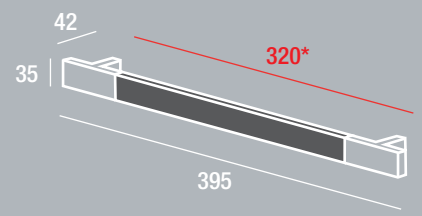

misure su richiesta size on request

Finiture Finishings	Eps Epoxy Coatings	Applicazioni Applications
G115	E10	E10
	E11	E11
		I1
		L1
		L2

MN 240 Z

Design
CRP

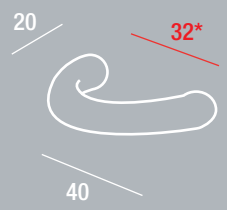

Finiture Finishings	Eps Epoxy Coatings	Applicazioni Applications
G104	E1	
G115	E9	

MN 183/8 Z

Design
CRP

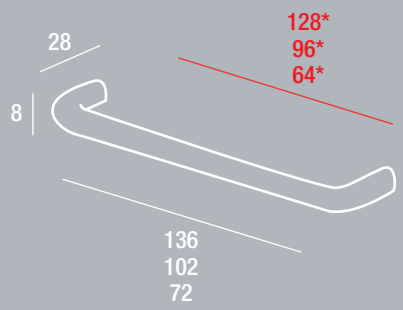

Finiture Finishings	Eps Epoxy Coatings	Applicazioni Applications
G104	E1	
G115	E9	

MN 183/8 F

Design CRP

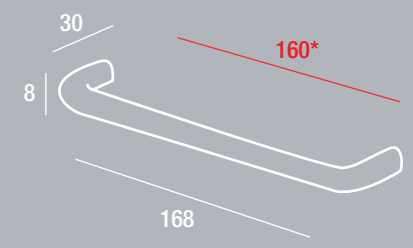

Finiture Finishings	Eps Epoxy Coatings	Applicazioni Applications
G104	E1	
G115	E9	

misure su richiesta size on request

MN 590 F

Design CRP

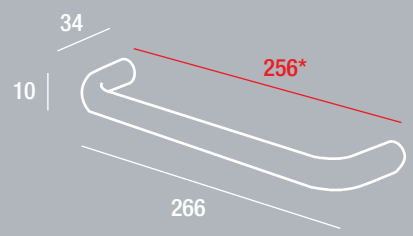

Finiture Finishings	Eps Epoxy Coatings	Applicazioni Applications
G104	E1	
G115	E9	

misure su richiesta size on request

MN 557 Z

Design CRP

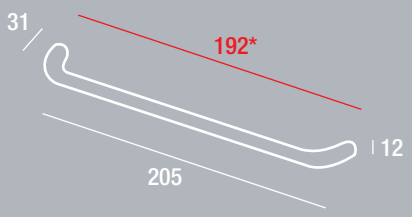

Finiture Finishings	Eps Epoxy Coatings	Applicazioni Applications
G104	E1	
G115	E9	

MN 452 Z

Design CRP

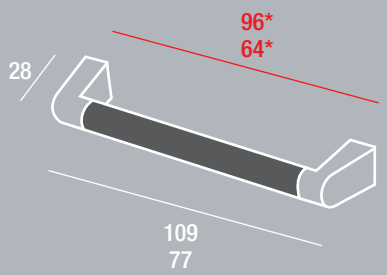

Finiture Finishings	Eps Epoxy Coatings	Applicazioni Applications
G104	E1	E1
G115	E9	E9
		G104
		G115
		U1

misure su richiesta size on request

MN 703 Z

Design CRP

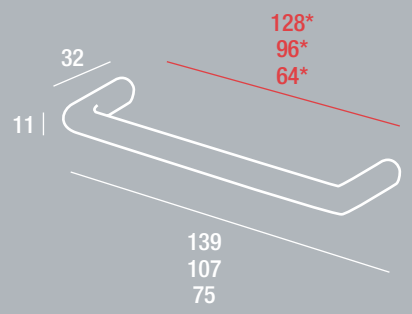

Finiture Finishings	Eps Epoxy Coatings	Applicazioni Applications
G104	E1	
G115	E9	

MN 804 Z

Design CRP

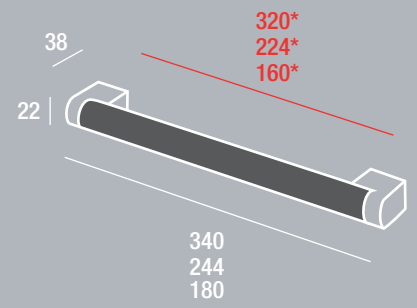

misure su richiesta size on request

Finiture Finishings	Eps Epoxy Coatings	Applicazioni Applications
G104	E1	L1
G115	E9	L2

MN 804 Z

Design CRP

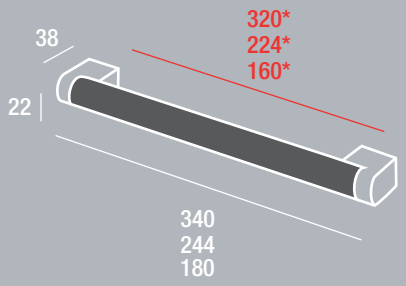

Finiture Finishings	Eps Epoxy Coatings	Applicazioni Applications
G104	E1	A12
G115	E9	

MN 804 Z

Design CRP

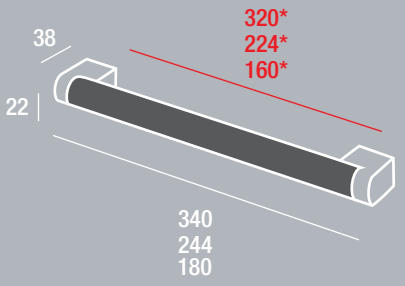

misure su richiesta size on request

Finiture Finishings	Eps Epoxy Coatings	Applicazioni Applications
G104	E1	E1
G115	E9	E9
		G104
		G115

MN 952 Z

Design
Lino Codato

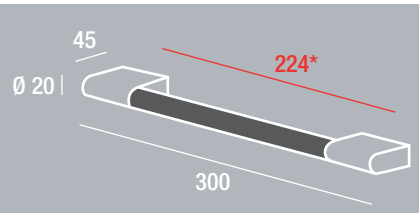

misure su richiesta size on request

Finiture Finishings	Eps Epoxy Coatings	Applicazioni Applications
G104	E1	E10
G115	E9	E11
	E10	G104
	E11	G115
		L1
		L2

MN 458 Z

Design
CRP

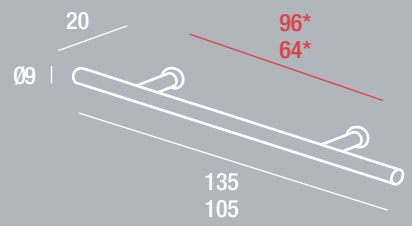

Finiture Finishings	Eps Epoxy Coatings	Applicazioni Applications
G104	E1	
G115	E9	

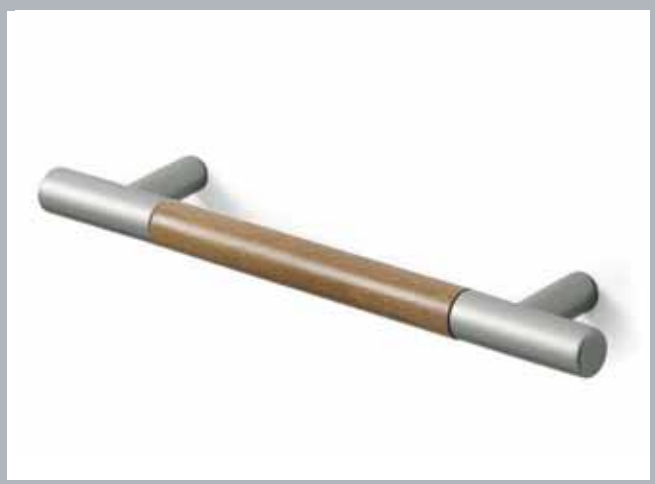

MN 650 Z

Design
CRP

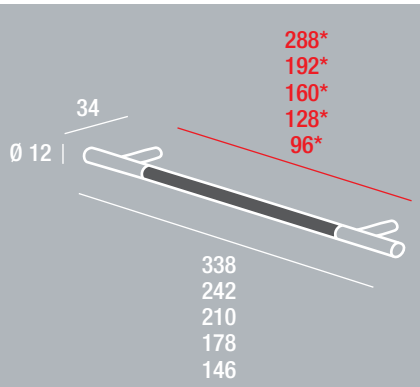

misure su richiesta size on request

Finiture Finishings	Eps Epoxy Coatings	Applicazioni Applications
G104	E1	L1
G115	E9	L2

MN 650 Z

Design
CRP

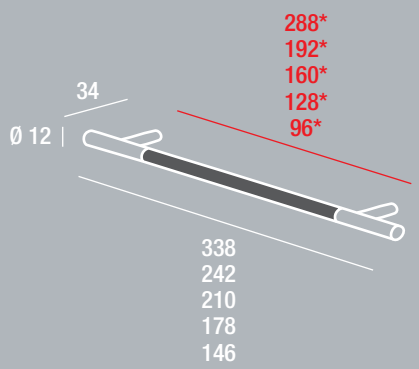

misure su richiesta size on request

Finiture Finishings	Eps Epoxy Coatings	Applicazioni Applications
G104	E1	E1
G115	E9	E9
		G104
		G115

MN 653 Z

Design CRP

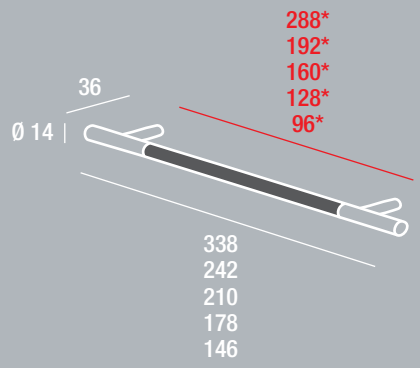

misure su richiesta size on request

Finiture Finishings	Eps Epoxy Coatings	Applicazioni Applications
G104	E1	L1
G115	E9	L2

MN 653 Z

Design CRP

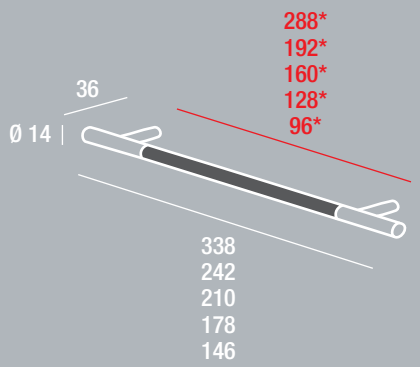

misure su richiesta size on request

Finiture Finishings	Eps Epoxy Coatings	Applicazioni Applications
G104	E1	E1
G115	E9	E9
		G104
		G115

MN 951 I

Design Lino Codato

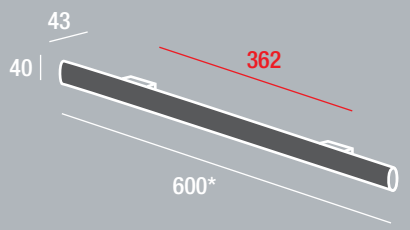

misure su richiesta size on request

Finiture Finishings	Eps Epoxy Coatings	Applicazioni Applications
	E10	E10
	E11	E11
		I1

MN 955 I

Design Lino Codato

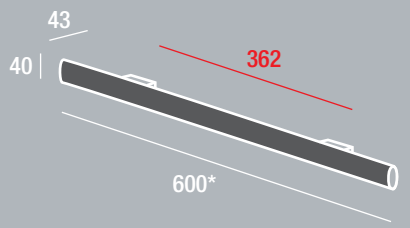

misure su richiesta size on request

Finiture Finishings	Eps Epoxy Coatings	Applicazioni Applications
G104	E1	U1
G115		

MN 679 Z

Design
Marelli e Molteni

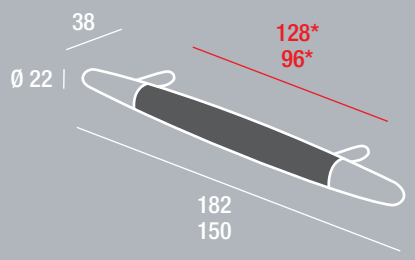

Finiture Finishings	Eps Epoxy Coatings	Applicazioni Applications
G104	E1	E1
G115	E9	E9
		G104
		G115

MN 679 Z

Design
Marelli e Molteni

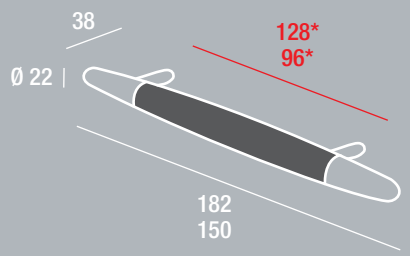

Finiture Finishings	Eps Epoxy Coatings	Applicazioni Applications
G104	E1	L1
G115	E9	L2

MN 685 Z

Design
Marelli e Molteni

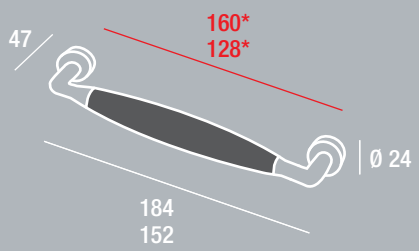

Finiture Finishings	Eps Epoxy Coatings	Applicazioni Applications
G104	E1	A7
G115	E9	A8

MN 685 Z

Design
Marelli e Molteni

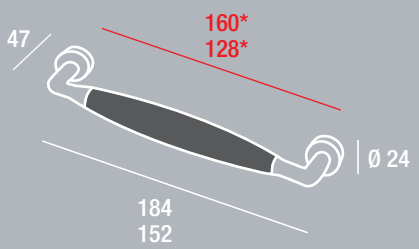

Finiture Finishings	Eps Epoxy Coatings	Applicazioni Applications
G104	E1	L1
G115	E9	L2

MN 651 Z

Design CRP

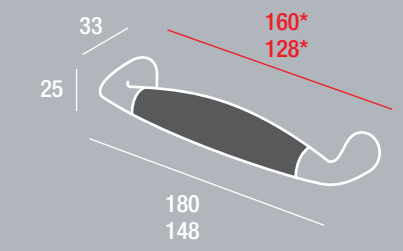

Finiture Finishings	Eps Epoxy Coatings	Applicazioni Applications
G104	E1	L1
G115	E9	L2

MN 628 Z

Design CRP

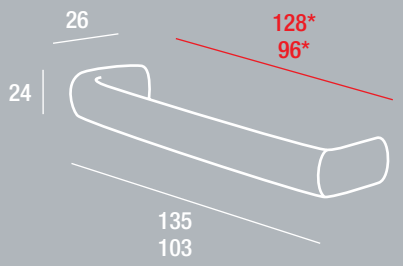

Finiture Finishings	Eps Epoxy Coatings	Applicazioni Applications
G104	E1	
G115	E9	

MN 652 Z

Design Fabio Redaelli

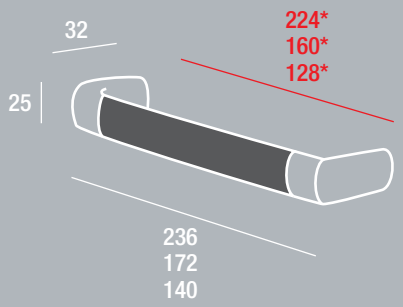

Finiture Finishings	Eps Epoxy Coatings	Applicazioni Applications
G104	E1	A7
G115	E9	A9
		A11
		A12

MN 652 Z

Design Fabio Redaelli

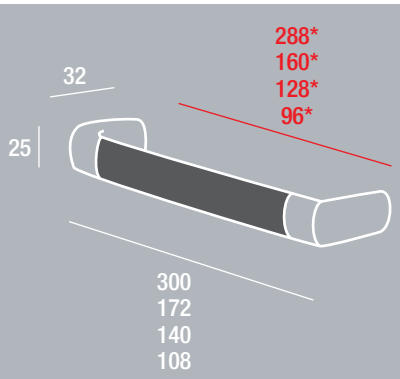

Finiture Finishings	Eps Epoxy Coatings	Applicazioni Applications
G104	E1	L1
G115	E9	L2

misure su richiesta size on request

MN 652 Z

Design
Fabio Redaelli

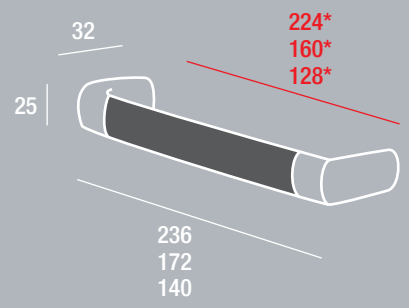

misure su richiesta size on request

Finiture Finishings	Eps Epoxy Coatings	Applicazioni Applications
G104	E1	E10
G115	E9	E11
	E10	I1
	E11	

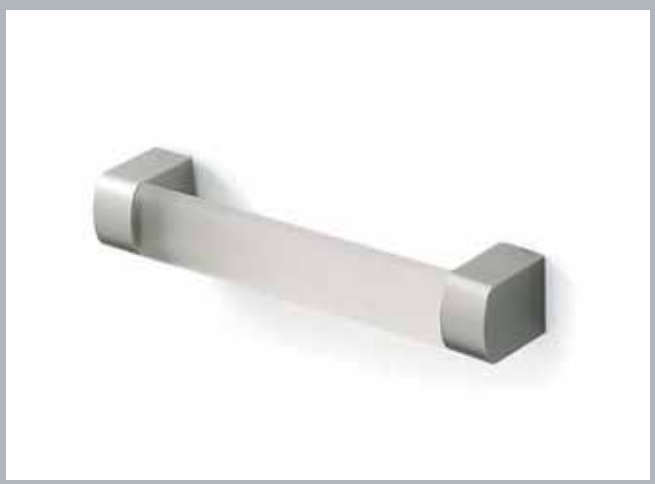

MN 860 Z

Design
Fabio Redaelli

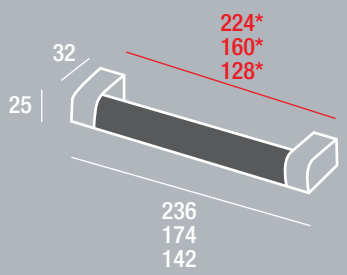

Finiture Finishings	Eps Epoxy Coatings	Applicazioni Applications
G104	E1	A7
G115	E9	A9
		A11
		A12

MN 860 Z

Design
Fabio Redaelli

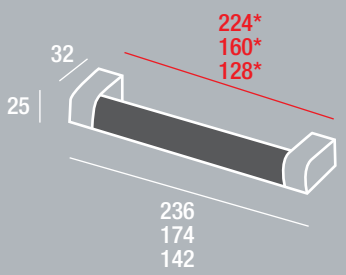

misure su richiesta size on request

Finiture Finishings	Eps Epoxy Coatings	Applicazioni Applications
G104	E1	E10
G115	E9	E11
	E10	I1
	E11	L1
		L2

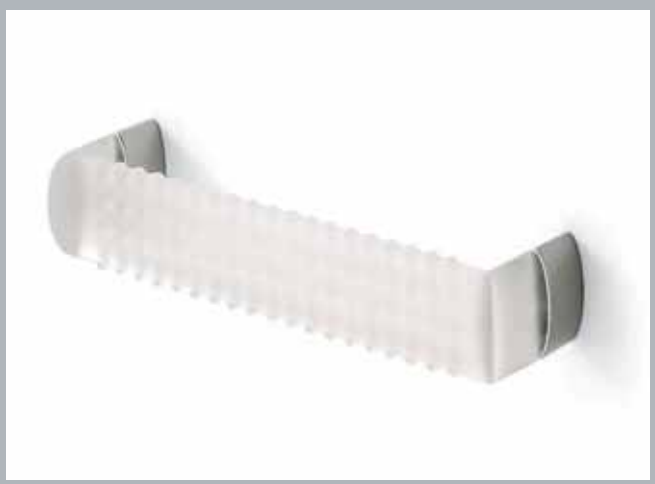

MN 857 Z

Design
CRP

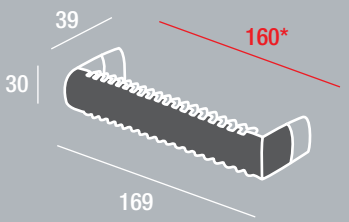

Finiture Finishings	Eps Epoxy Coatings	Applicazioni Applications
G104	E1	A13
	E9	

MN 857 Z

Design CRP

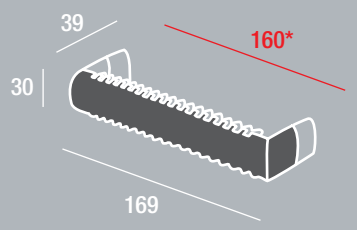

Finiture Finishings	Eps Epoxy Coatings	Applicazioni Applications
G104	E1	O1
	E9	

MN 904 Z

Design Marelli e Molteni

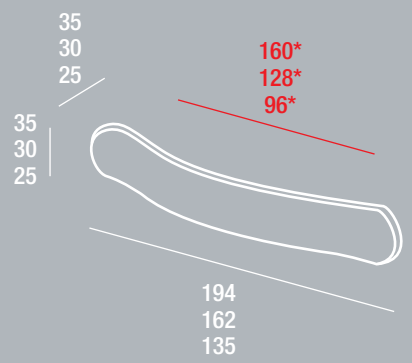

Finiture Finishings	Eps Epoxy Coatings	Applicazioni Applications
G104	E1	
G115	E9	

MN 289 Z

Design CRP

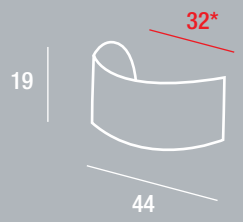

Finiture Finishings	Eps Epoxy Coatings	Applicazioni Applications
G104	E1	
G115	E9	

MN 678 Z

Design Marelli e Molteni

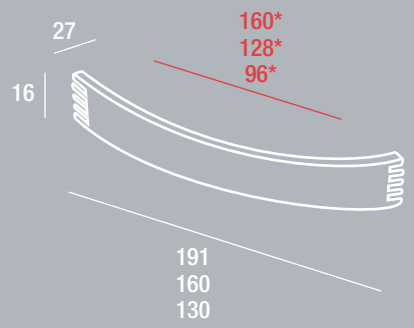

Finiture Finishings	Eps Epoxy Coatings	Applicazioni Applications
G104	E1	
G115	E9	

MN 621 Z

Design CRP

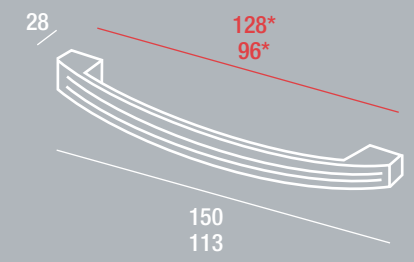

Finiture Finishings	Eps Epoxy Coatings	Applicazioni Applications
G104	E1	
G115	E9	

MN 909 Z

Design Marelli e Molteni

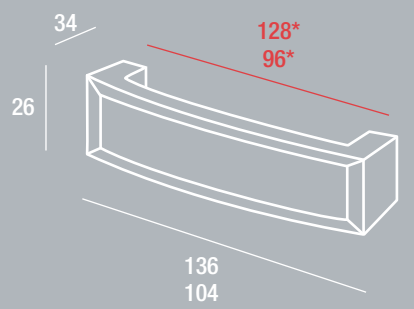

Finiture Finishings	Eps Epoxy Coatings	Applicazioni Applications
G104	E1	
	E9	

MN 912 Z

Design Marelli e Molteni

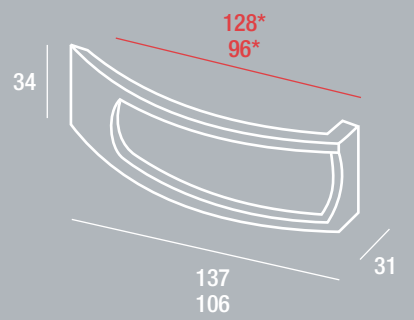

Finiture Finishings	Eps Epoxy Coatings	Applicazioni Applications
G104	E1	
	E9	

MN 943 Z

Design CRP

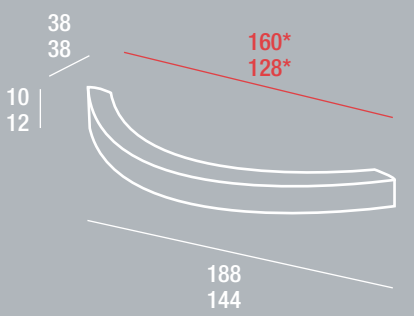

Finiture Finishings	Eps Epoxy Coatings	Applicazioni Applications
G104	E1	
G115	E9	

MN 475 Z

Design CRP

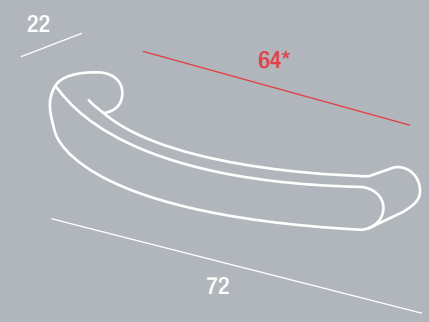

Finiture Finishings	Eps Epoxy Coatings	Applicazioni Applications
G104	E1	
	E9	

MN 563 Z

Design CRP

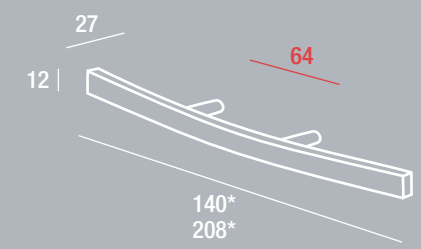

Finiture Finishings	Eps Epoxy Coatings	Applicazioni Applications
G104	E1	
G115	E9	

MN 491 Z

Design CRP

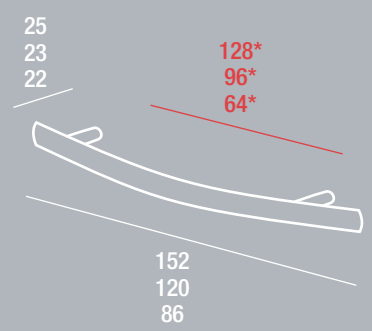

Finiture Finishings	Eps Epoxy Coatings	Applicazioni Applications
G104	E1	
G115	E9	

MN 632 Z

Design CRP

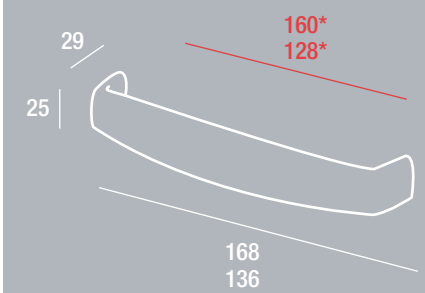

Finiture Finishings	Eps Epoxy Coatings	Applicazioni Applications
G104	E1	
G115	E9	

MN 737 Z

Design
Giuseppe Bavuso

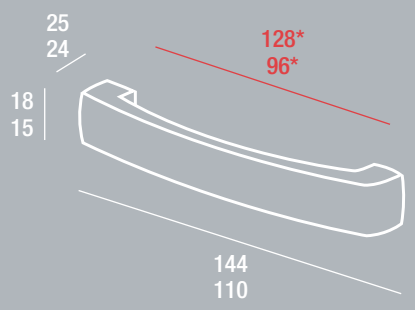

Finiture Finishings	Eps Epoxy Coatings	Applicazioni Applications
G104	E1	
G115	E9	

MN 735 Z

Design
Marelli e Molteni

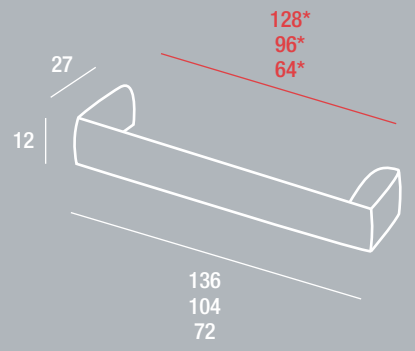

Finiture Finishings	Eps Epoxy Coatings	Applicazioni Applications
G104	E1	
G115	E9	

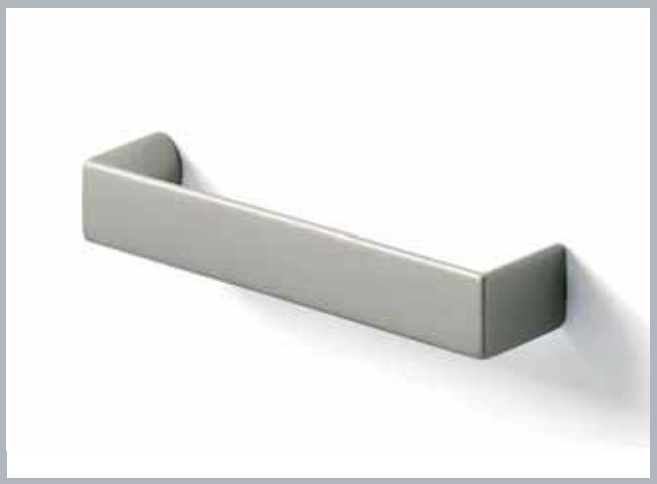

MN 680 Z

Design
Marelli e Molteni

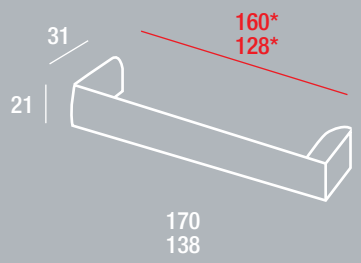

Finiture Finishings	Eps Epoxy Coatings	Applicazioni Applications
G104	E1	
G115	E9	

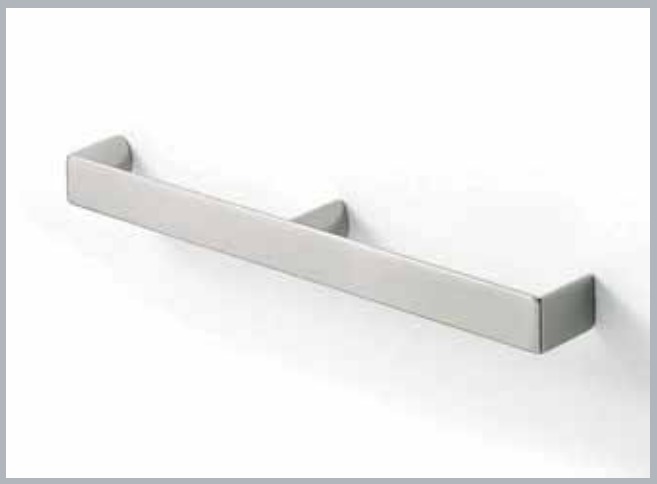

MN 680 Z

Design
Marelli e Molteni

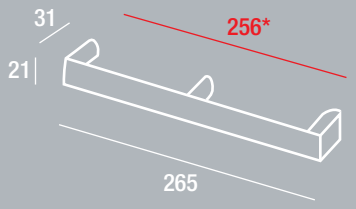

Finiture Finishings	Eps Epoxy Coatings	Applicazioni Applications
G104	E1	
G115	E9	

MN 668 Z

Design
CRP

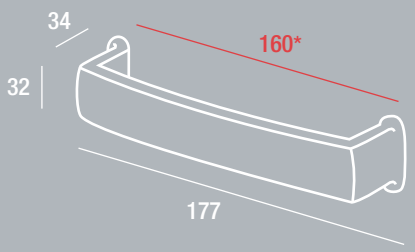

Finiture Finishings	Eps Epoxy Coatings	Applicazioni Applications
G104	E1	
G115	E9	

MN 707 Z

Design
Fabio Redaelli

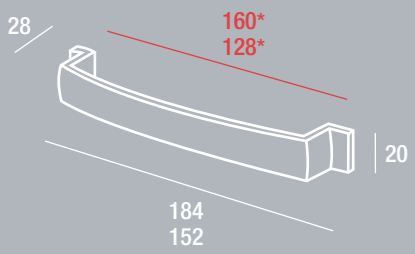

Finiture Finishings	Eps Epoxy Coatings	Applicazioni Applications
G104	E1	
G115	E9	

MN 598 Z

Design
CRP

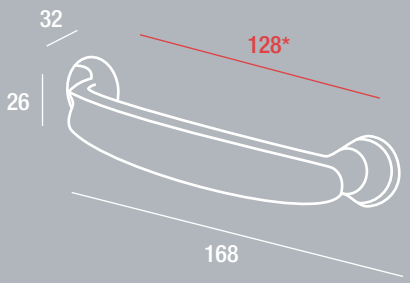

Finiture Finishings	Eps Epoxy Coatings	Applicazioni Applications
G104	E1	
G115	E9	

MN 789 Z

Design
Marelli e Molteni

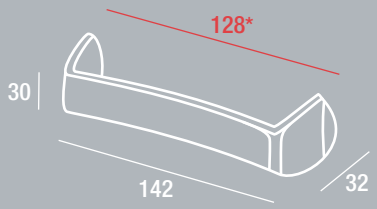

Finiture Finishings	Eps Epoxy Coatings	Applicazioni Applications
G104	E1	
G115	E9	

MN 789 A/G

Design Marelli e Molteni

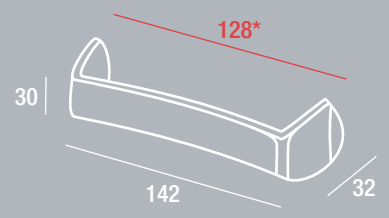

Finiture Finishings	Eps Epoxy Coatings	Applicazioni Applications
A12		
O1		

MN 692 Z

Design Fabio Redaelli

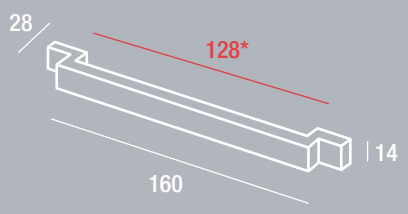

Finiture Finishings	Eps Epoxy Coatings	Applicazioni Applications
G104	E1	
G115	E9	

MN 671 Z

Design CRP

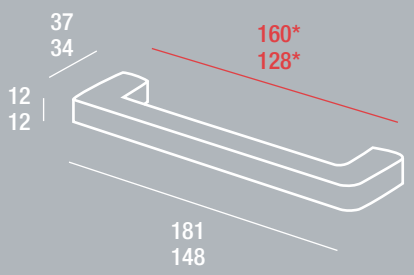

Finiture Finishings	Eps Epoxy Coatings	Applicazioni Applications
G104	E1	
G115	E9	

MN 670 Z

Design CRP

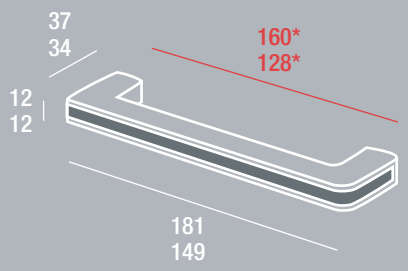

Finiture Finishings	Eps Epoxy Coatings	Applicazioni Applications
G104	E1	L1
G115	E9	L2

MN 780 Z

Design
CRP

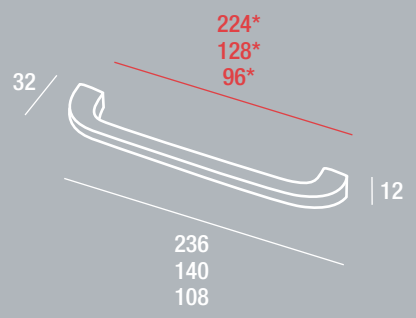

Finiture Finishings	Eps Epoxy Coatings	Applicazioni Applications
G104	E1	
G115	E9	

MN 786 Z

Design
Luigi Vaghi

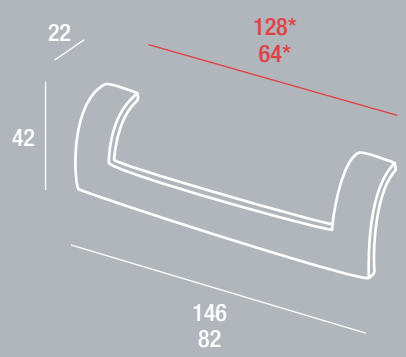

Finiture Finishings	Eps Epoxy Coatings	Applicazioni Applications
G104	E1	
G115	E9	

MN 570 Z

Design
CRP

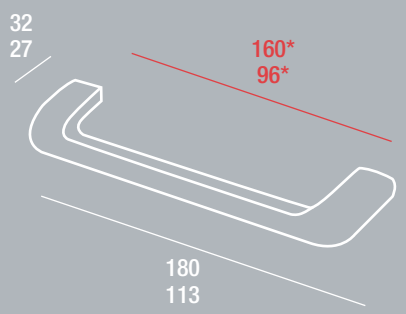

Finiture Finishings	Eps Epoxy Coatings	Applicazioni Applications
G104	E1	
G115	E9	

MN 779 Z

Design
Fabio Redaelli

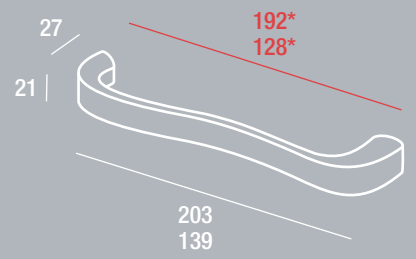

Finiture Finishings	Eps Epoxy Coatings	Applicazioni Applications
G104	E1	
G115	E9	

MN 611 Z

Design CRP

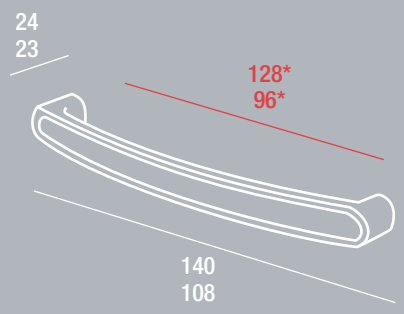

Finiture Finishings	Eps Epoxy Coatings	Applicazioni Applications
G104	E1	
G115	E9	

MN 485 Z

Design CRP

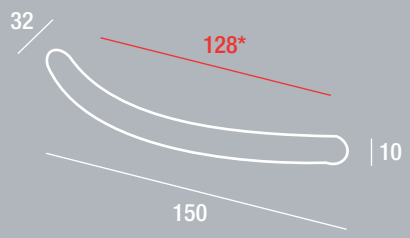

Finiture Finishings	Eps Epoxy Coatings	Applicazioni Applications
G104	E1	
G115	E9	

MN 496 Z

Design CRP

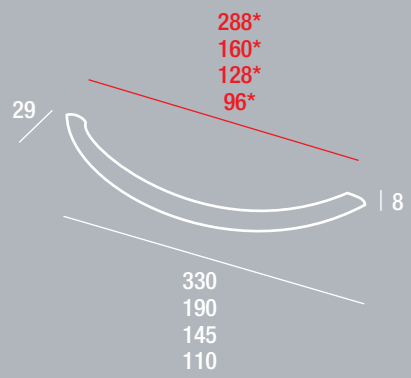

Finiture Finishings	Eps Epoxy Coatings	Applicazioni Applications
G104	E1	
G115	E9	

MN 492 Z

Design Fabio Redaelli

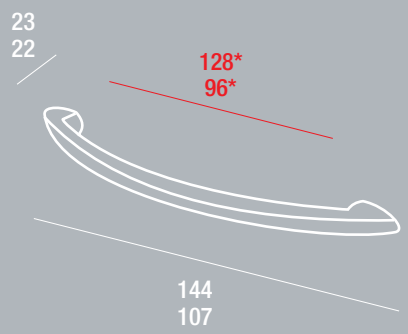

Finiture Finishings	Eps Epoxy Coatings	Applicazioni Applications
G104	E1	
G115	E9	

MN 637 Z

Design
CRP

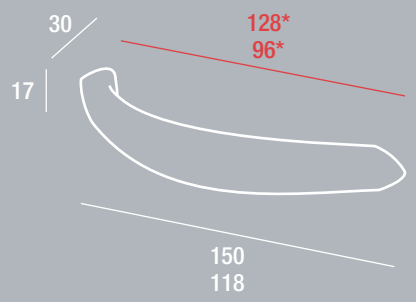

Finiture Finishings	Eps Epoxy Coatings	Applicazioni Applications
G104	E1	
G115	E9	

MN 661 Z

Design
Fabio Redaelli

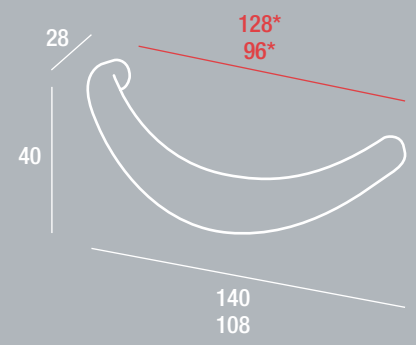

Finiture Finishings	Eps Epoxy Coatings	Applicazioni Applications
G104	E1	
G115	E9	

MN 623 Z

Design
CRP

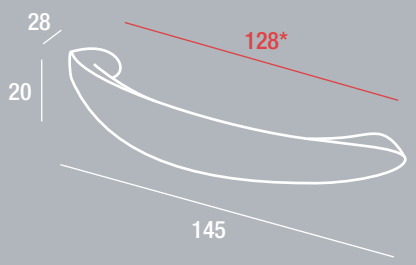

Finiture Finishings	Eps Epoxy Coatings	Applicazioni Applications
G104	E1	
G115	E9	

MN 610 Z

Design
CRP

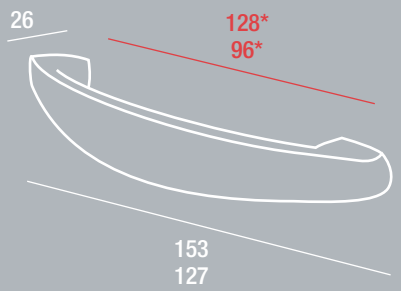

Finiture Finishings	Eps Epoxy Coatings	Applicazioni Applications
G104	E1	
G115	E9	

MN 644 Z

Design
Fabio Redaelli

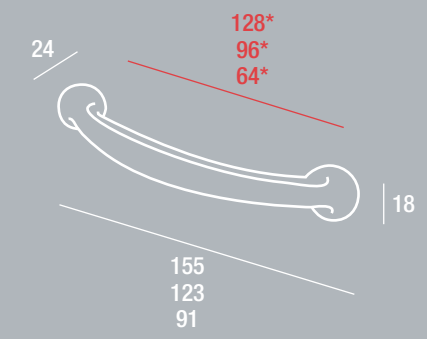

Finiture Finishings	Eps Epoxy Coatings	Applicazioni Applications
G104	E1	
G115	E9	

MN 536 Z

Design
Fabio Redaelli

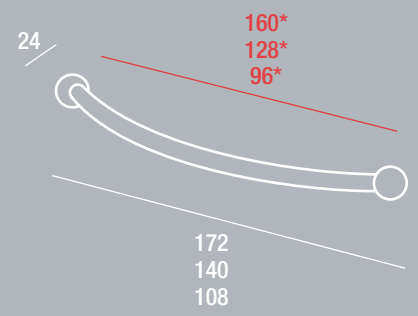

Finiture Finishings	Eps Epoxy Coatings	Applicazioni Applications
G104	E1	
G115	E9	

MN 770 Z

Design
CRP

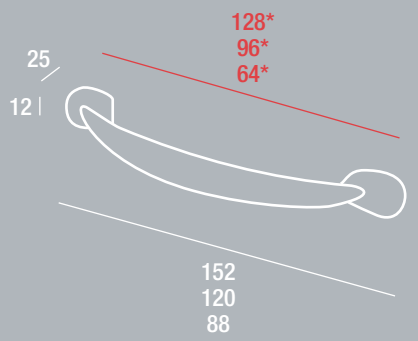

Finiture Finishings	Eps Epoxy Coatings	Applicazioni Applications
G104	E1	
G115	E9	

MN 577 Z

Design
Fabio Redaelli

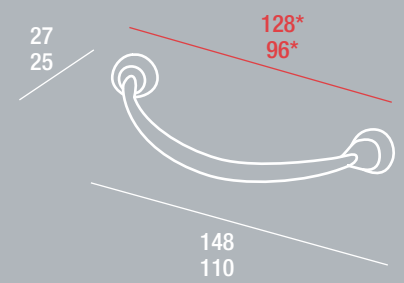

Finiture Finishings	Eps Epoxy Coatings	Applicazioni Applications
G104	E1	
G115	E9	

MN 662 Z

Design
Fabio Redaelli

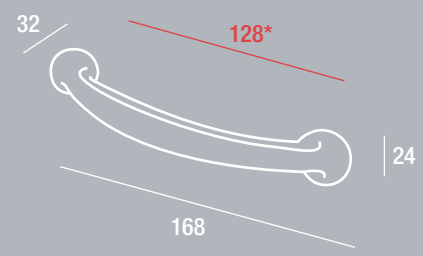

Finiture Finishings	Eps Epoxy Coatings	Applicazioni Applications
G104	E1	
G115	E9	

MN 699 Z

Design
Fabio Redaelli

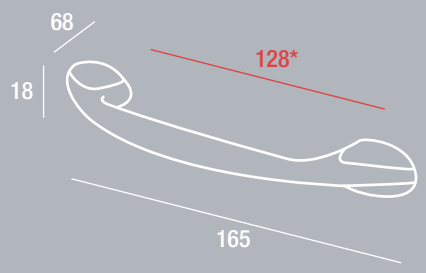

Finiture Finishings	Eps Epoxy Coatings	Applicazioni Applications
G104	E1	
G115	E9	
G140		

MN 559 Z

Design
CRP

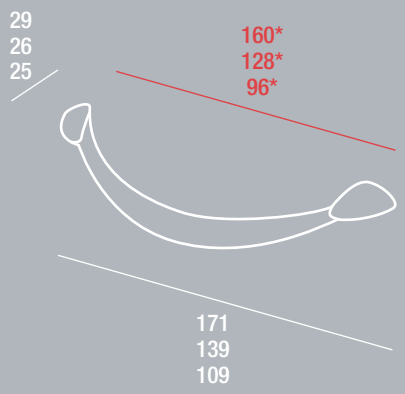

Finiture Finishings	Eps Epoxy Coatings	Applicazioni Applications
G104	E1	
G115	E9	

MN 608 Z

Design
CRP

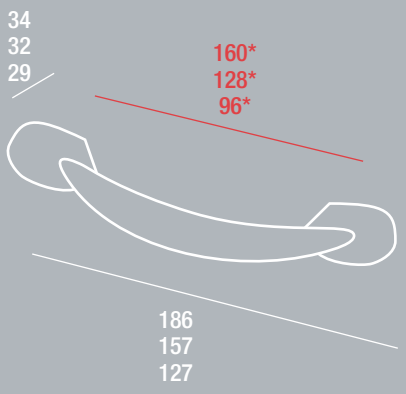

Finiture Finishings	Eps Epoxy Coatings	Applicazioni Applications
G104	E1	
G115	E9	

MN 710 Z

Design
Fabio Redaelli

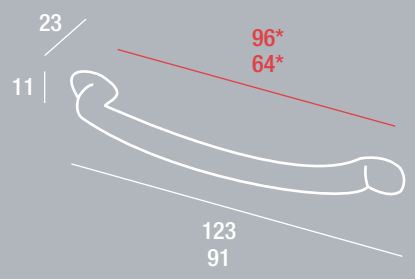

Finiture Finishings	Eps Epoxy Coatings	Applicazioni Applications
G104	E1	
G115	E9	

MN 693 Z

Design
CRP

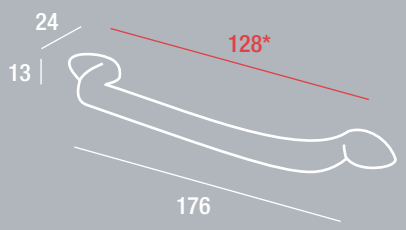

Finiture Finishings	Eps Epoxy Coatings	Applicazioni Applications
G104	E1	
G115	E9	

MN 597 Z

Design
CRP

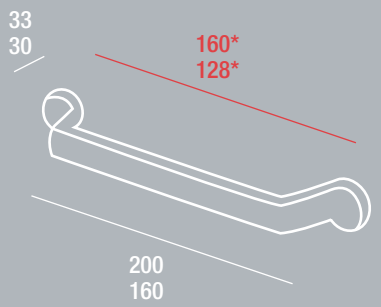

Finiture Finishings	Eps Epoxy Coatings	Applicazioni Applications
G104	E1	
G115	E9	

MN 669 Z

Design
CRP

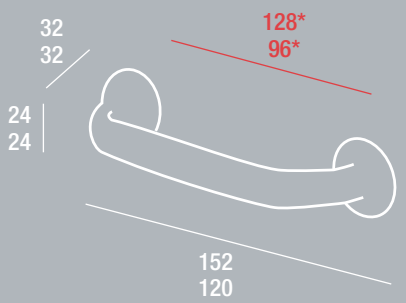

Finiture Finishings	Eps Epoxy Coatings	Applicazioni Applications
G104	E1	
G115	E9	

MN 682 Z

Design
Fabio Redaelli

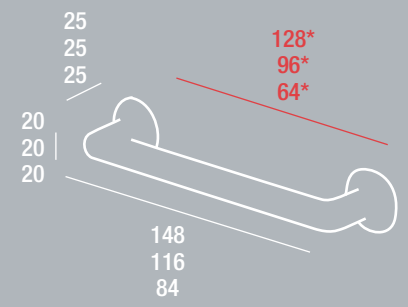

Finiture Finishings	Eps Epoxy Coatings	Applicazioni Applications
G104	E1	
G115	E9	

MN 832 Z

Design
Fabio Redaelli

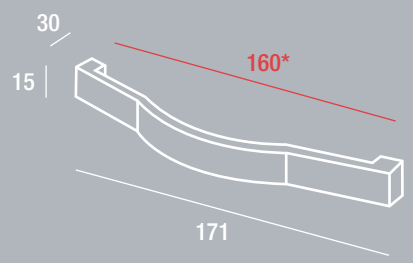

Finiture Finishings	Eps Epoxy Coatings	Applicazioni Applications
G104	E1	
G115	E9	

MN 833 Z

Design
Fabio Redaelli

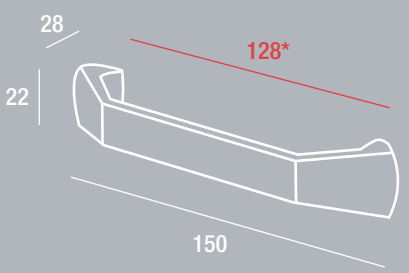

Finiture Finishings	Eps Epoxy Coatings	Applicazioni Applications
G104	E1	
G115	E9	

MN 905 Z

Design
Marelli e Molteni

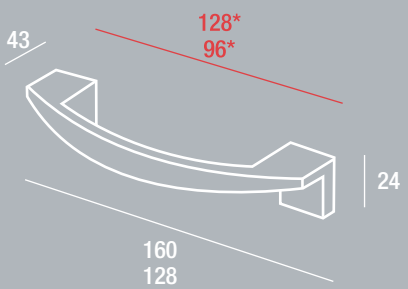

Finiture Finishings	Eps Epoxy Coatings	Applicazioni Applications
G104	E1	
G171	E9	

MN 674 Z

Design
Marelli e Molteni

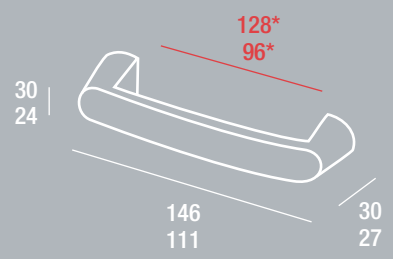

Finiture Finishings	Eps Epoxy Coatings	Applicazioni Applications
G104	E1	
G115	E9	

MN 706 Z

Design
Giuseppe Bavuso

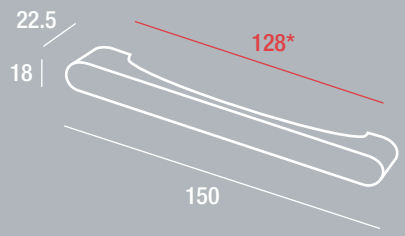

Finiture Finishings	Eps Epoxy Coatings	Applicazioni Applications
G104	E1	
G115	E9	

MN 686 Z

Design
Giuseppe Bavuso

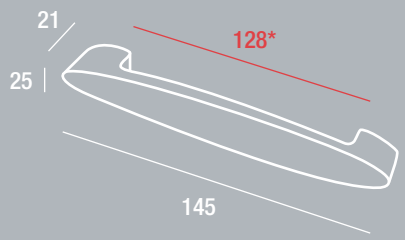

Finiture Finishings	Eps Epoxy Coatings	Applicazioni Applications
G104	E1	
G115	E9	

MN 967 Z

Design
Klaus Bergen

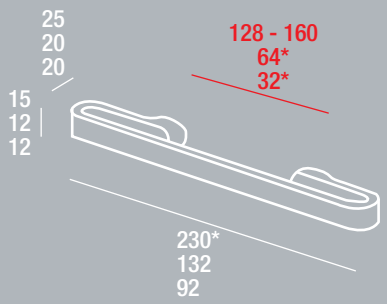

interasse multiplo
multiple inter-axial
hole distance

Finiture Finishings	Eps Epoxy Coatings	Applicazioni Applications
G171	E1	
	E9	

MN 249 Z

Design CRP

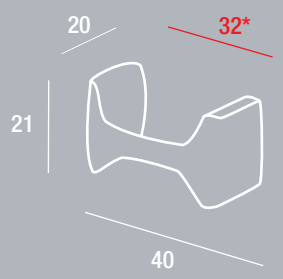

Finiture Finishings	Eps Epoxy Coatings	Applicazioni Applications
G104	E1	
G115	E9	

MN 977 Z

Design Klaus Bergen

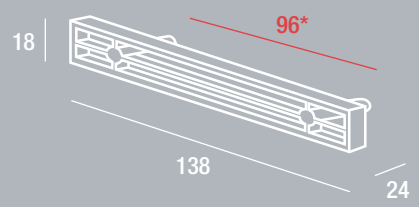

Finiture Finishings	Eps Epoxy Coatings	Applicazioni Applications
	E1	
	E9	

MN 979 Z

Design Klaus Bergen

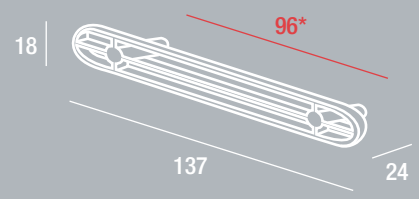

Finiture Finishings	Eps Epoxy Coatings	Applicazioni Applications
	E1	
	E9	

MN 481 Z

Design CRP

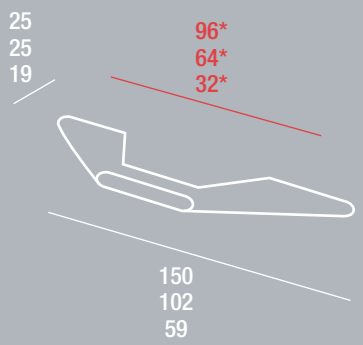

Finiture Finishings	Eps Epoxy Coatings	Applicazioni Applications
G104	E1	
G115	E9	

MN 507 Z

Design CRP

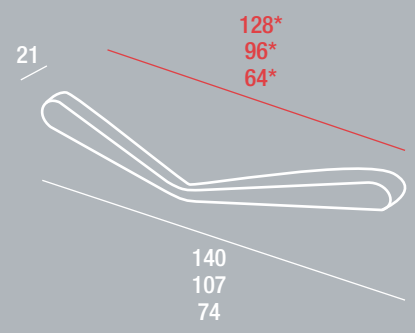

Finiture Finishings	Eps Epoxy Coatings	Applicazioni Applications
G104	E1	
G115	E9	

MN 580 Z

Design CRP

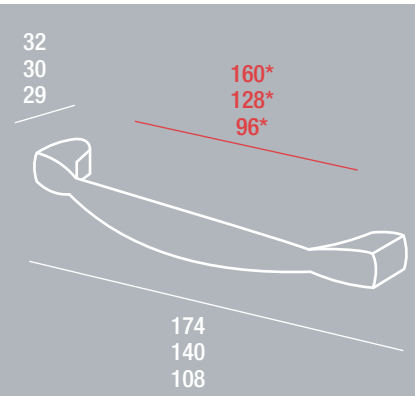

Finiture Finishings	Eps Epoxy Coatings	Applicazioni Applications
G104	E1	
G115	E9	

MN 647 Z

Design CRP

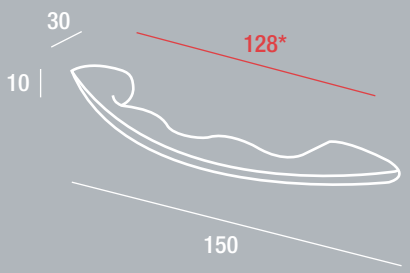

Finiture Finishings	Eps Epoxy Coatings	Applicazioni Applications
G104	E1	
G115	E9	

MN 459 Z

Design Fabio Redaelli

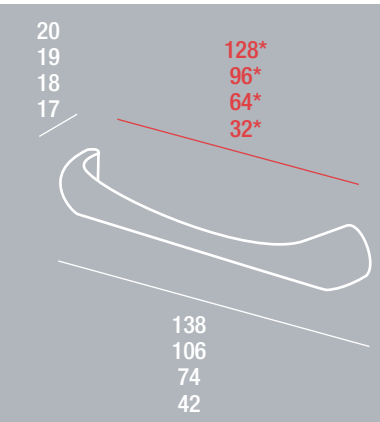

Finiture Finishings	Eps Epoxy Coatings	Applicazioni Applications
G104	E1	
G115	E9	

MN 869 Z

Design CRP

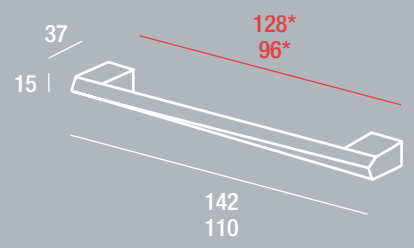

Finiture Finishings	Eps Epoxy Coatings	Applicazioni Applications
G104	E1	
G115	E9	

MN 870 Z

Design CRP

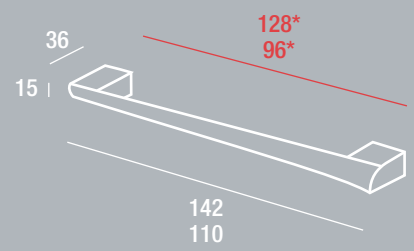

Finiture Finishings	Eps Epoxy Coatings	Applicazioni Applications
G104	E1	
G115	E9	

MN 553 Z

Design CRP

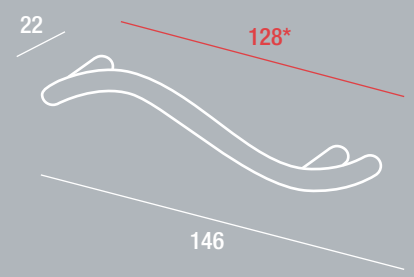

Finiture Finishings	Eps Epoxy Coatings	Applicazioni Applications
G104	E1	
G115	E9	

MN 667 Z

Design CRP

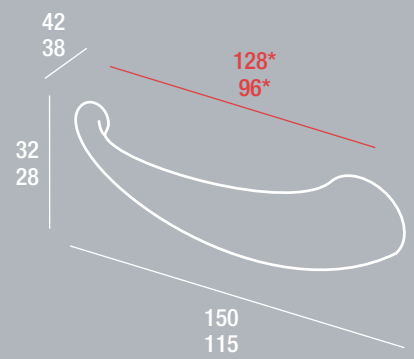

Finiture Finishings	Eps Epoxy Coatings	Applicazioni Applications
G104	E1	
G115	E9	

MN 2080 design Gordon Guillaumier

maniglie barra . bar handles

MN 2069 Z

Design Gordon Guillaumier

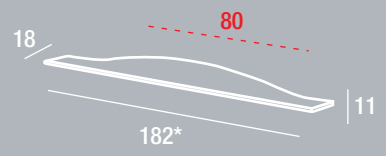

Finiture Finishings	Eps Epoxy Coatings	Applicazioni Applications
G104	E1	
G124		

MN 2080 Z

Design Gordon Guillaumier

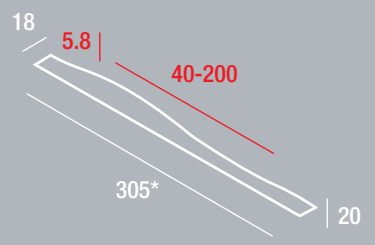

foratura non in asse interasse multiplo

holes not in axle multiple inter-axial hole distance

Finiture Finishings	Eps Epoxy Coatings	Applicazioni Applications
G104	E1	
G124		

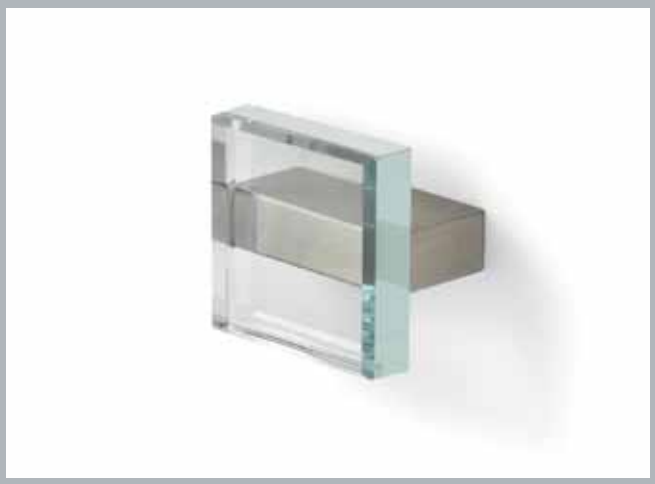

MN 2027 V

Design Gordon Guillaumier

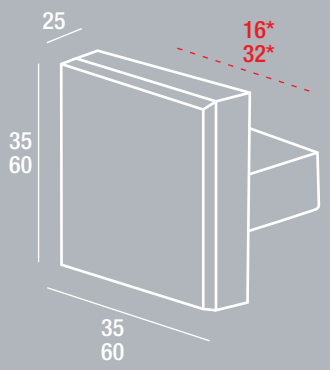

Finiture Finishings	Eps Epoxy Coatings	Applicazioni Applications
X1		V6

MN 2024 V

Design Gordon Guillaumier

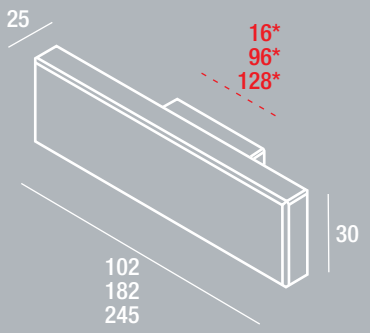

Finiture Finishings	Eps Epoxy Coatings	Applicazioni Applications
X1		V6

MN 2029 Z
Design Alessandro Piva

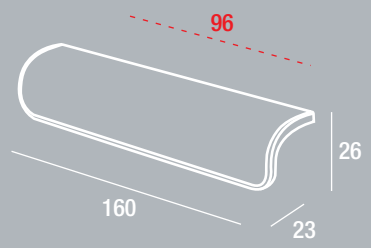

Finiture Finishings	Eps Epoxy Coatings	Applicazioni Applications
G104	E1	L4
G115		U1

MN 2030 Z
Design Alessandro Piva

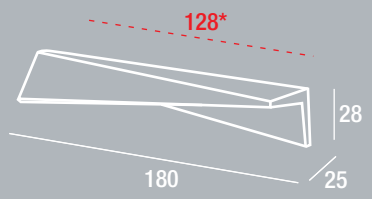

Finiture Finishings	Eps Epoxy Coatings	Applicazioni Applications
G104	E1	
G124		

MN 1133 I
Design Giuseppe Bavuso

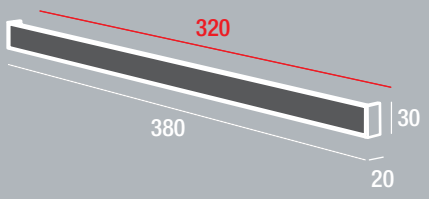

misure su richiesta size on request

Finiture Finishings	Eps Epoxy Coatings	Applicazioni Applications
	E10	L4
	E11	U1

MN 1139 I
Design Giuseppe Bavuso

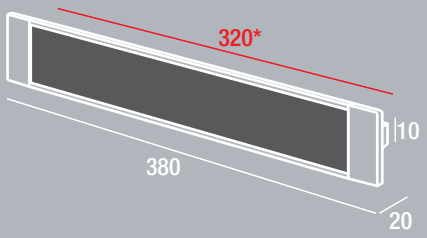

misure su richiesta size on request

Finiture Finishing	Eps Epoxy Coatings	Applicazioni Applications
	E10	L4
	E11	U1

MN 2073 Z Design Alessandro Elli

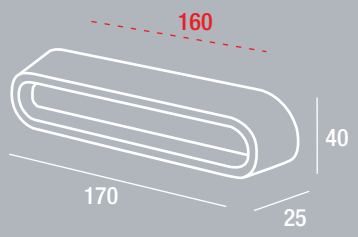

Finiture Finishings	Eps Epoxy Coatings	Applicazioni Applications
G104	E1	

MN 2073 Z Design Alessandro Elli

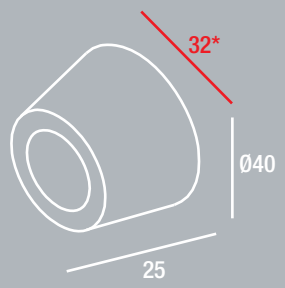

Finiture Finishings	Eps Epoxy Coatings	Applicazioni Applications
G104	E1	

MN 2073 G Design Alessandro Elli

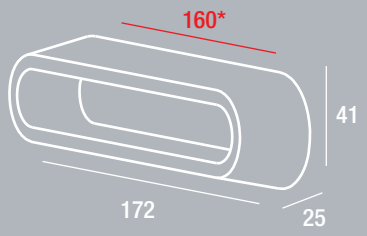

Finiture Finishings	Eps Epoxy Coatings	Applicazioni Applications
01		

MN 2073 G Design Alessandro Elli

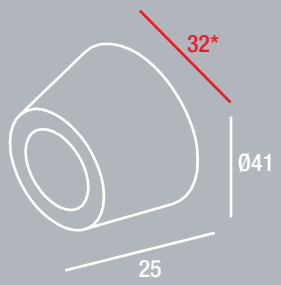

Finiture Finishings	Eps Epoxy Coatings	Applicazioni Applications
01		

MN 1143 Z

Design Gordon Guillaumier

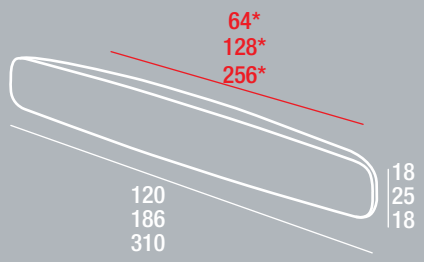

Finiture Finishings	Eps Epoxy Coatings	Applicazioni Applications
G104	E1	
G115	E9	

MN 1173 Z

Design Gordon Guillaumier

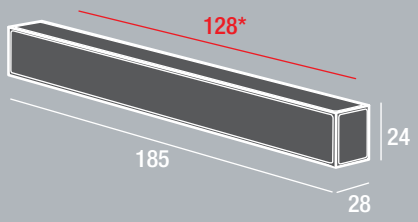

Finiture Finishings	Eps Epoxy Coatings	Applicazioni Applications
G104	E1	U1
	E9	L4

MN 1124 I

Design CRP

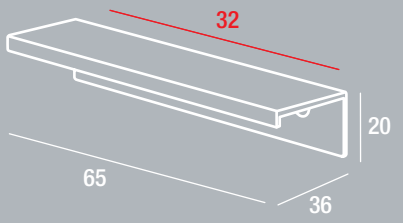

misure su richiesta size on request

Finiture Finishings	Eps Epoxy Coatings	Applicazioni Applications
I1	E10	
I2	E11	

MN 1172 Z

Design Alessandro Elli

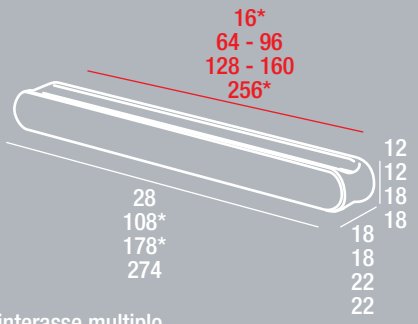

interasse multiplo
multiple inter-axial hole distance

Finiture Finishings	Eps Epoxy Coatings	Applicazioni Applications
G104	E1	
G124	E9	

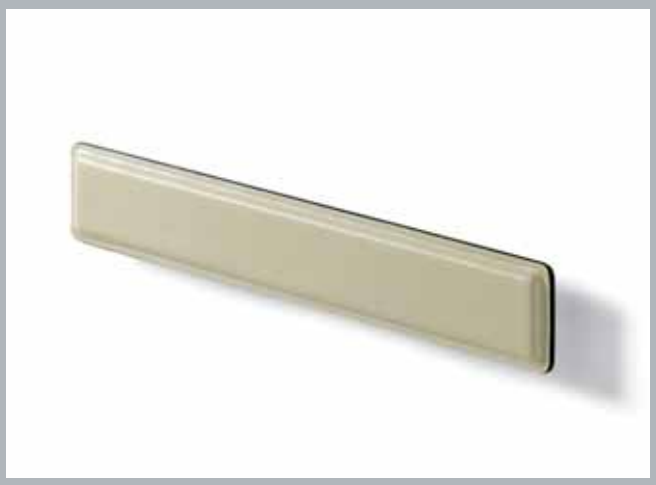

MN 2007 I

Design
Gordon Guillaumier

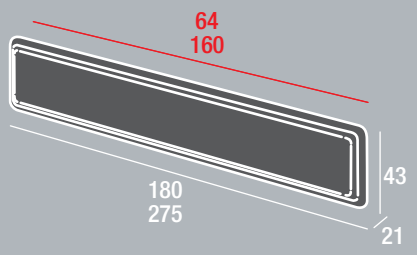

Finiture Finishings	Eps Epoxy Coatings	Applicazioni Applications
		U5

MN 2006 I

Design
Gordon Guillaumier

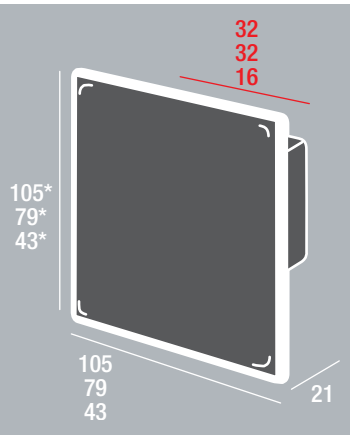

Finiture Finishings	Eps Epoxy Coatings	Applicazioni Applications
		U5

MN 1107 Z

Design
CRP

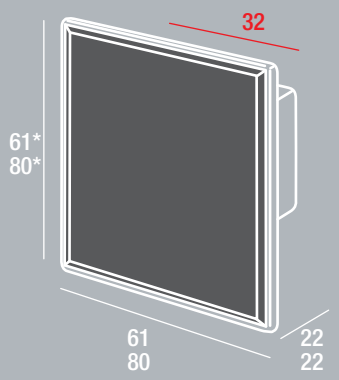

Finiture Finishings	Eps Epoxy Coatings	Applicazioni Applications
G104	E1	V5
G115	E9	
GR024		

MN 1107 Z

Design
CRP

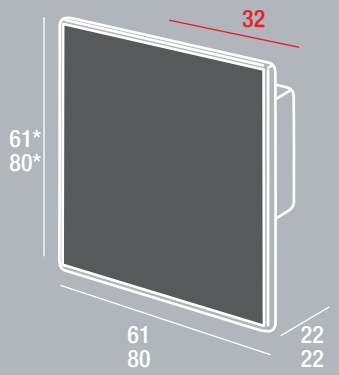

Finiture Finishings	Eps Epoxy Coatings	Applicazioni Applications
G104	E1	L4
G115	E9	
GR024		

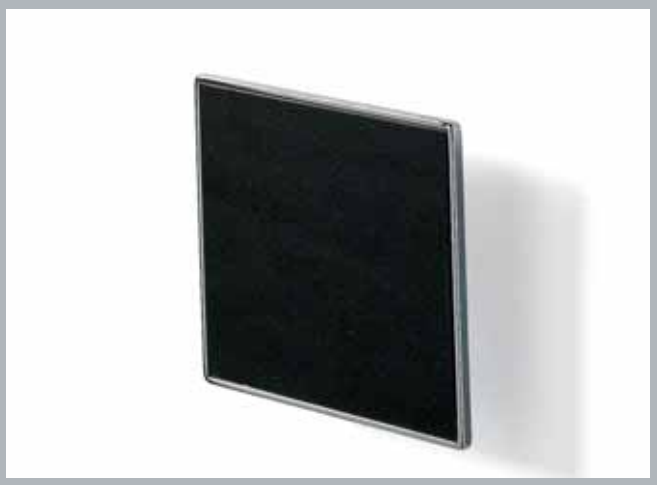

MN 1107 Z

Design CRP

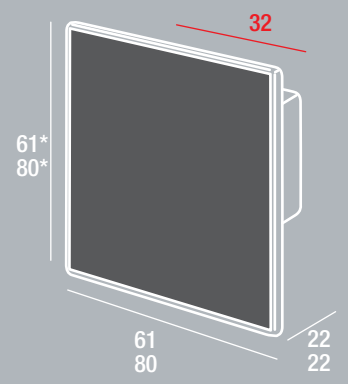

Finiture Finishings	Eps Epoxy Coatings	Applicazioni Applications
G104	E1	U1
G115	E9	
GR024		

MN 1126 Z

Design Silvano Barsacchi

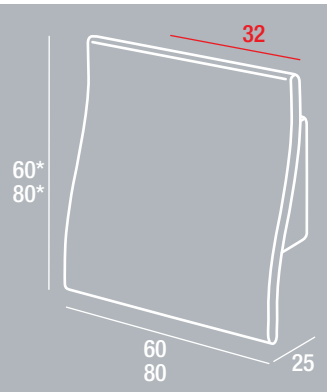

Finiture Finishings	Eps Epoxy Coatings	Applicazioni Applications
G104	E1	
G115	E9	

MN 1018 Z

Design CRP

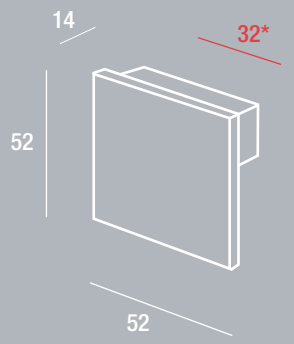

Finiture Finishings	Eps Epoxy Coatings	Applicazioni Applications
G104	E1	
G115	E9	

MN 1051 Z

Design CRP

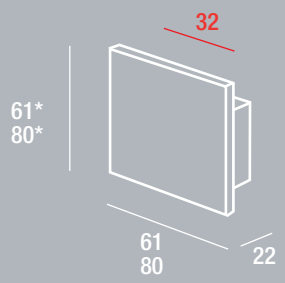

Finiture Finishings	Eps Epoxy Coatings	Applicazioni Applications
G104	E1	
G115	E9	
G176		

MN 1046 Z

Design Gordon Guillaumier

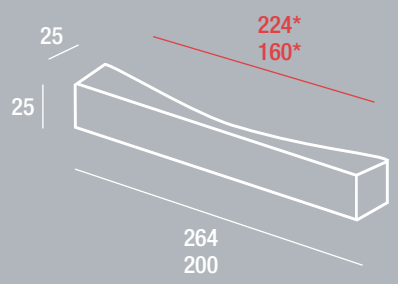

Finiture Finishings	Eps Epoxy Coatings	Applicazioni Applications
G104	E1	
G115	E9	
G124		
G174		

MN 1046 Z

Design Gordon Guillaumier

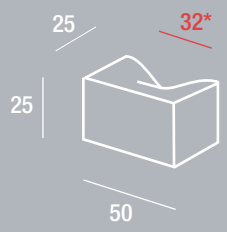

Finiture Finishings	Eps Epoxy Coatings	Applicazioni Applications
G104	E1	
G115	E9	
G124		
G174		

MN 1060 Z

Design Gordon Guillaumier

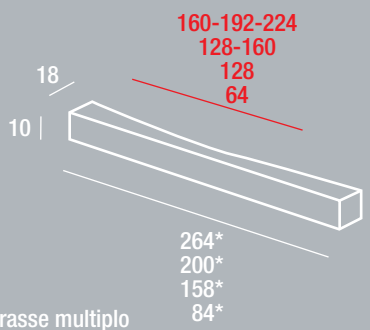

interasse multiplo
multiple inter-axial
hole distance

Finiture Finishings	Eps Epoxy Coatings	Applicazioni Applications
G104	E1	
G115	E9	
G124		
G174		

MN 1060 Z

Design Gordon Guillaumier

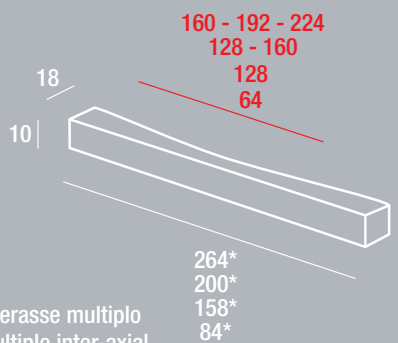

interasse multiplo
multiple inter-axial
hole distance

Finiture Finishings	Eps Epoxy Coatings	Applicazioni Applications
G104	E1	
G115	E9	
G124		
G174		

MN 1034 Z

Design CRP

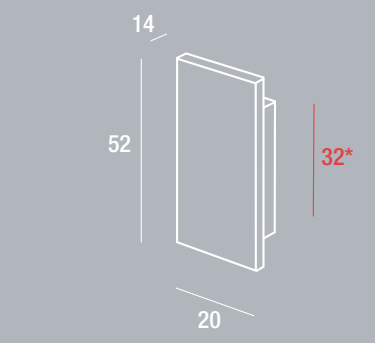

Finiture Finishings	Eps Epoxy Coatings	Applicazioni Applications
G104	E1	
G115	E9	

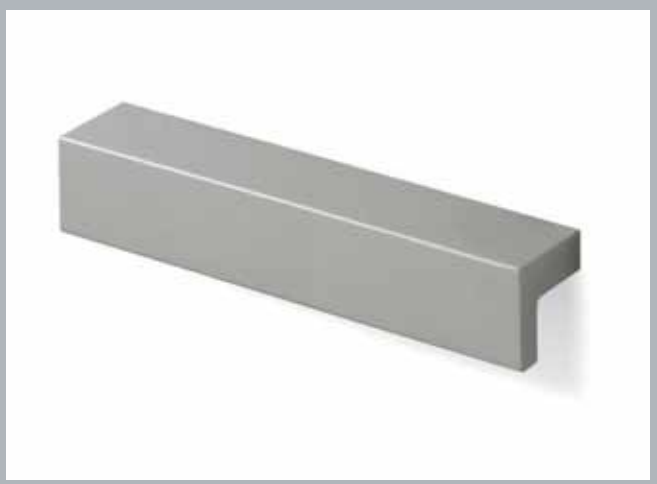

MN 646 I

Design Marelli e Molteni

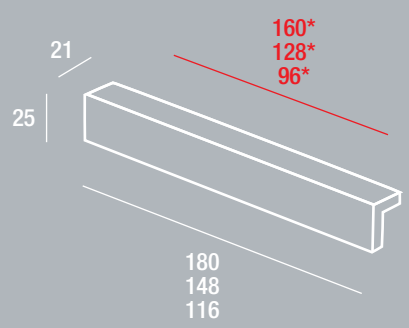

misure su richiesta size on request

Finiture Finishings	Eps Epoxy Coatings	Applicazioni Applications
I1	E10	
	E11	

MN 646 Z

Design Marelli e Molteni

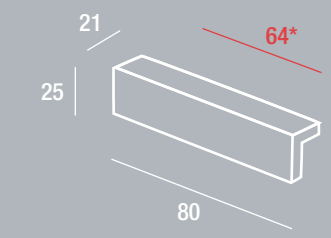

Finiture Finishings	Eps Epoxy Coatings	Applicazioni Applications
G104	E1	
G115	E9	
G124		

MN 886 Z

Design Giuseppe Bavuso

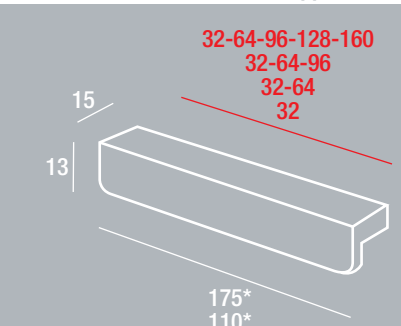

interasse multiplo
multiple inter-axial
hole distance

Finiture Finishings	Eps Epoxy Coatings	Applicazioni Applications
G104	E1	
G115	E9	

MN 641 Z

Design
Marelli e Molteni

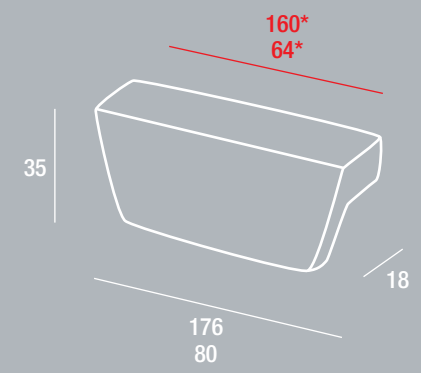

Finiture Finishings	Eps Epoxy Coatings	Applicazioni Applications
G104	E1	
G115	E9	

MN 962 I

Design
Pinuccio Borgonovo

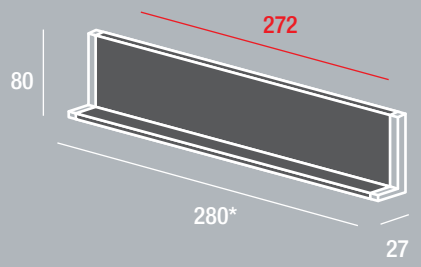

misure su richiesta size on request

Finiture Finishings	Eps Epoxy Coatings	Applicazioni Applications
G104	E1	U1
G115	E9	

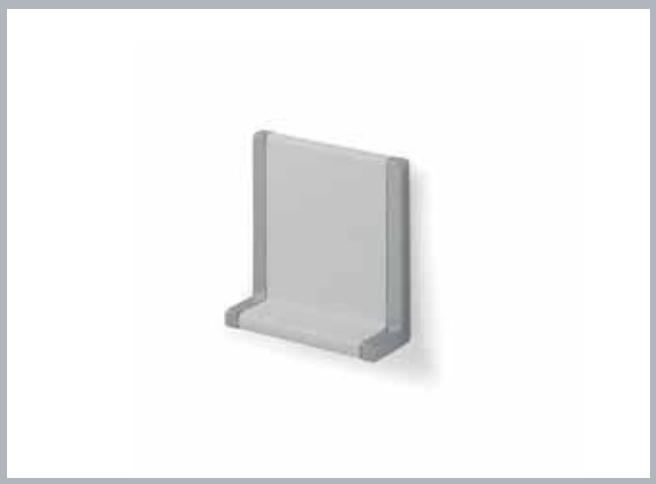

MN 962 I

Design
Pinuccio Borgonovo

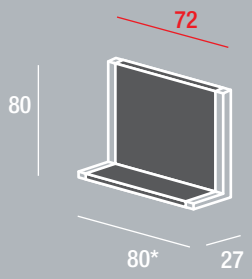

misure su richiesta size on request

Finiture Finishings	Eps Epoxy Coatings	Applicazioni Applications
G104	E1	U1
G115	E9	

MN 768 Z

Design
Marelli e Molteni

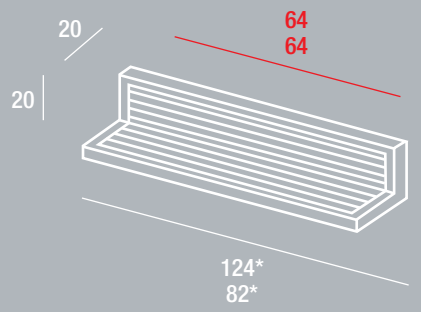

Finiture Finishings	Eps Epoxy Coatings	Applicazioni Applications
	E1	
	E9	

MN 968 Z

Design Giuseppe Bavuso

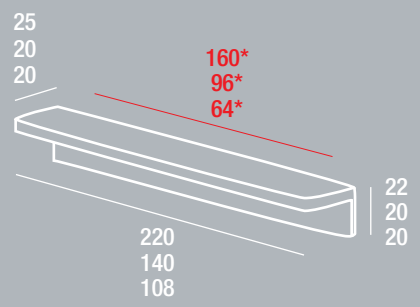

Finiture Finishings	Eps Epoxy Coatings	Applicazioni Applications
G171	E1	
	E9	

MN 810 I

Design Giuseppe Bavuso

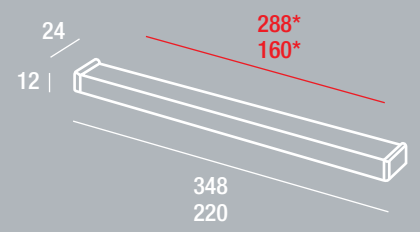

misure su richiesta size on request

Finiture Finishings	Eps Epoxy Coatings	Applicazioni Applications
	E10	
	E11	

MN 811 I

Design Giuseppe Bavuso

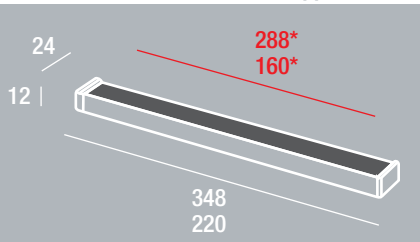

misure su richiesta size on request

Finiture Finishings	Eps Epoxy Coatings	Applicazioni Applications
	E10	L1
	E11	L2

MN 751 Z

Design Giuseppe Bavuso

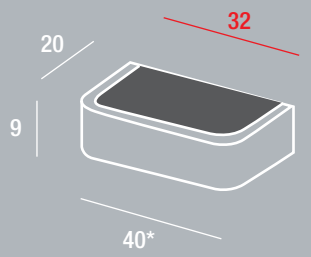

disponibile anche senza applicazione
available also without application

Finiture Finishings	Eps Epoxy Coatings	Applicazioni Applications
G104	E1	U1
G115	E9	

MN 751 Z

Design
Giuseppe Bavuso

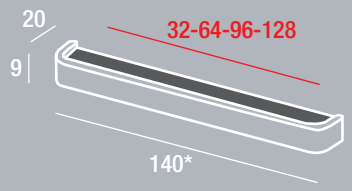

interasse multiplo / multiple Inter-axial hole distance
disponibile anche senza applicazione
available also without application

Finiture Finishings	Eps Epoxy Coatings	Applicazioni Applications
G104	E1	U1
G115	E9	

MN 769 Z

Design
Giuseppe Bavuso

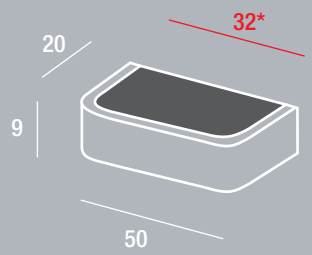

Finiture Finishings	Eps Epoxy Coatings	Applicazioni Applications
G104	E1	L1
G115	E9	L2

MN 769 Z

Design
Giuseppe Bavuso

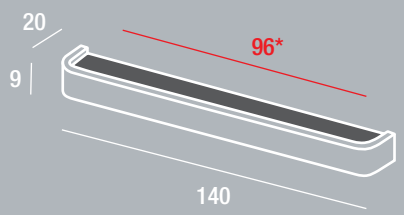

Finiture Finishings	Eps Epoxy Coatings	Applicazioni Applications
G104	E1	L1
G115	E9	L2

MN 738 Z

Design
Giuseppe Bavuso

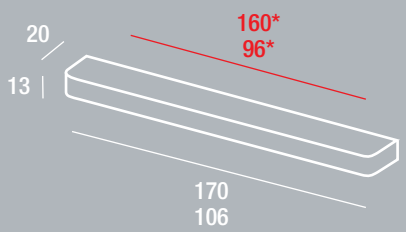

Finiture Finishings	Eps Epoxy Coatings	Applicazioni Applications
G104	E1	
G115	E9	

MN 972 I

Design
Giuseppe Bavuso

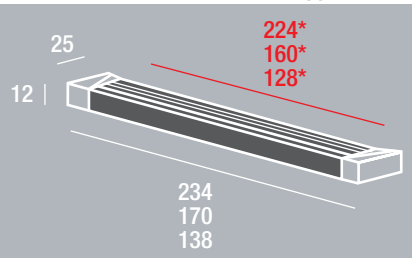

Finiture Finishings	Eps Epoxy Coatings	Applicazioni Applications
G104	E10	E10
G115	E11	E11
		I1

misure su richiesta size on request

MN 990 I/L

Design
Giuseppe Bavuso

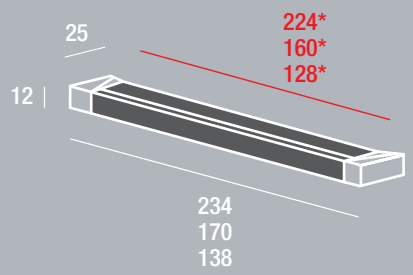

Finiture Finishings	Eps Epoxy Coatings	Applicazioni Applications
G104	E1	E10
G115	E10	E11
	E11	I1
		L1
		L2

misure su richiesta size on request

MN 806 Z

Design
Marelli e Molteni

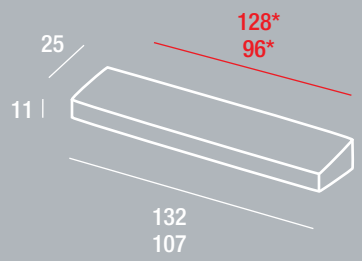

Finiture Finishings	Eps Epoxy Coatings	Applicazioni Applications
G104	E1	
G115	E9	

MN 616 Z

Design
CRP

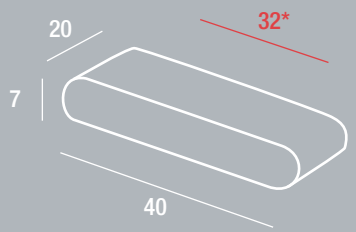

Finiture Finishings	Eps Epoxy Coatings	Applicazioni Applications
G104	E1	
G115	E9	

MN 591 Z

Design CRP

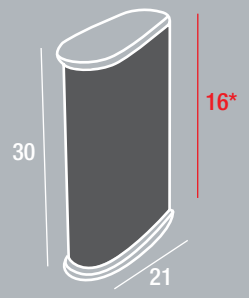

disponibile anche senza applicazione
available also without application

Finiture Finishings	Eps Epoxy Coatings	Applicazioni Applications
G104	E1	U1
G115	E9	

MN 566 Z

Design CRP

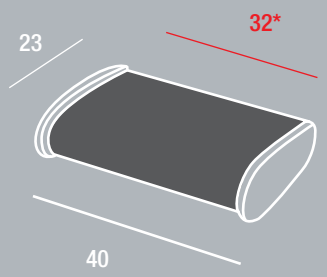

disponibile anche senza applicazione
available also without application

Finiture Finishings	Eps Epoxy Coatings	Applicazioni Applications
G104	E1	U1
G115	E9	

MN 889 Z

Design Marelli e Molteni

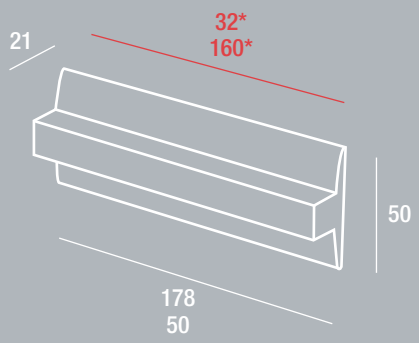

Finiture Finishings	Eps Epoxy Coatings	Applicazioni Applications
	E1	
	E9	

MN 792 Z

Design Marelli e Molteni

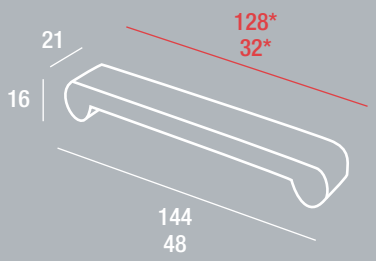

Finiture Finishings	Eps Epoxy Coatings	Applicazioni Applications
G104	E1	
G115	E9	

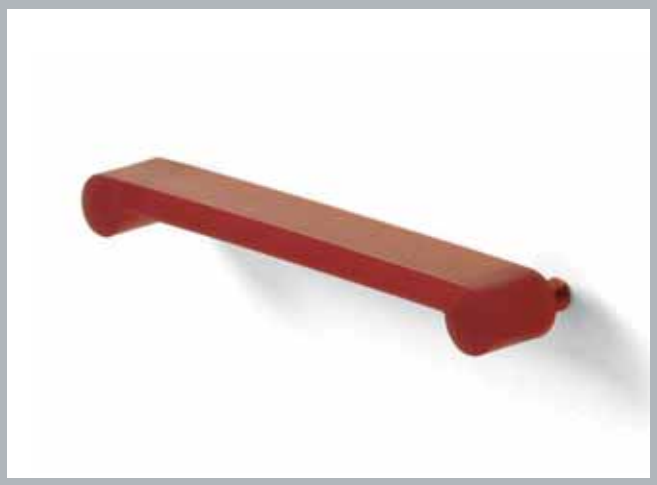

MN 805 A

Design
Marelli e Molteni

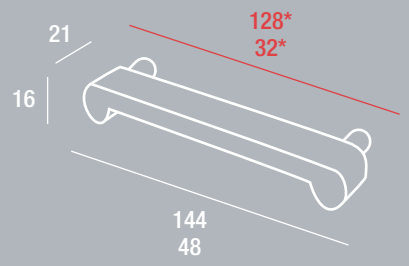

Finiture Finishings	Eps Epoxy Coatings	Applicazioni Applications
A13		

MN 753 Z

Design
Marelli e Molteni

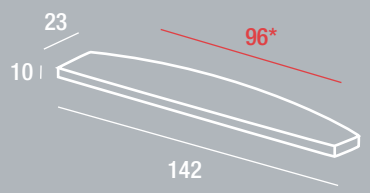

Finiture Finishings	Eps Epoxy Coatings	Applicazioni Applications
G104	E1	
G115	E9	

MN 739 Z

Design
Giuseppe Bavuso

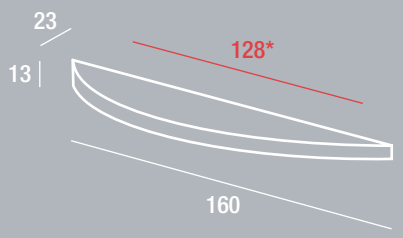

Finiture Finishings	Eps Epoxy Coatings	Applicazioni Applications
G104	E1	
G115	E9	

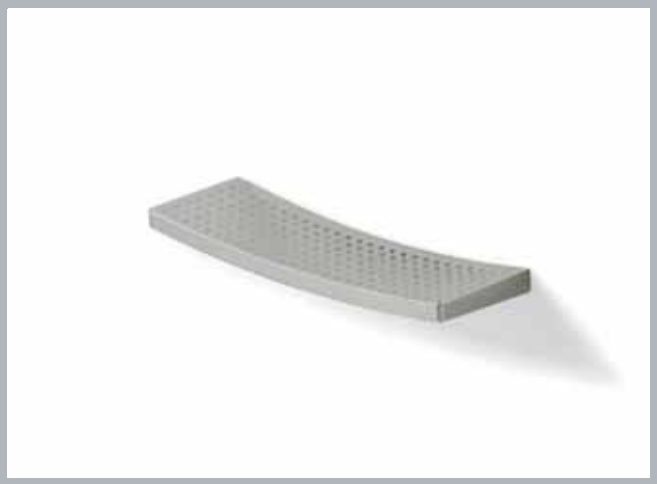

MN 797 Z

Design
Marelli e Molteni

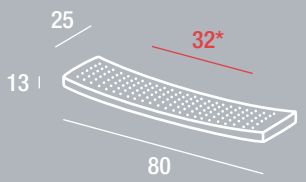

Finiture Finishings	Eps Epoxy Coatings	Applicazioni Applications
G104	E1	
G150	E9	

MN 876 Z

Design CRP

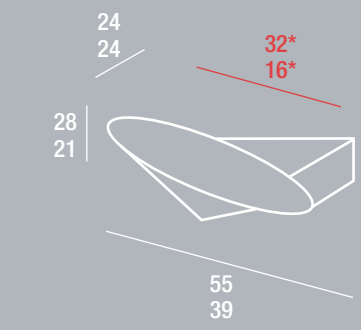

Finiture Finishings	Eps Epoxy Coatings	Applicazioni Applications
G104	E1	
G115	E9	

MN 877 Z

Design CRP

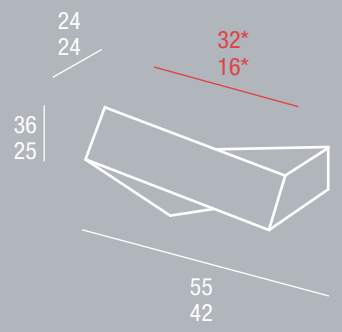

Finiture Finishings	Eps Epoxy Coatings	Applicazioni Applications
G104	E1	
G115	E9	

MN 878 Z

Design CRP

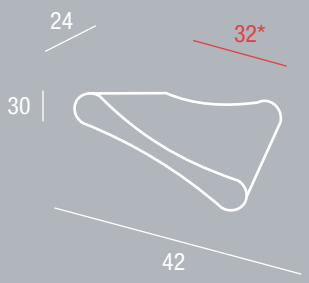

Finiture Finishings	Eps Epoxy Coatings	Applicazioni Applications
G104	E1	
G115	E9	

MN 969 Z

Design Klaus Bergen

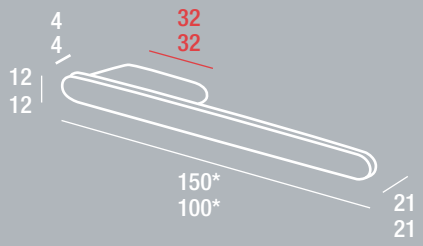

Finiture Finishings	Eps Epoxy Coatings	Applicazioni Applications
G104	E1	
G115	E9	

MN 950 Z

Design
Lino Codato

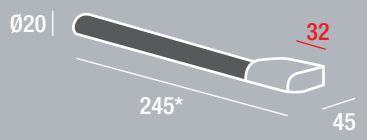

Finiture Finishings	Eps Epoxy Coatings	Applicazioni Applications
G115	E10	E10
	E11	E11
		X1
		I1

MN 982 Z

Design
Pinuccio Borgonovo

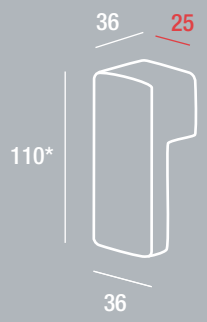

Finiture Finishings	Eps Epoxy Coatings	Applicazioni Applications
G104	E1	
G115	E9	

MN 900 Z

Design
Marelli e Molteni

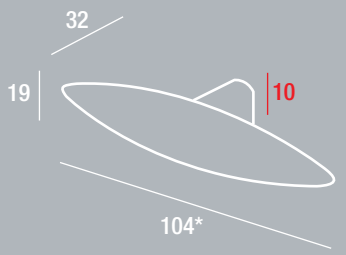

Finiture Finishings	Eps Epoxy Coatings	Applicazioni Applications
G104	E1	
G115	E9	

MN 932 G

Design
Marelli e Molteni

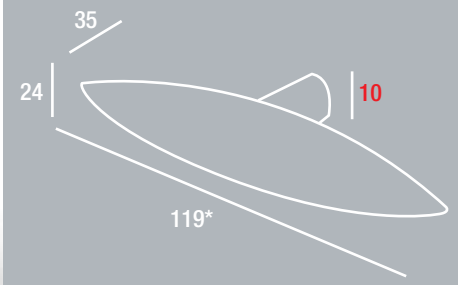

Finiture Finishings	Eps Epoxy Coatings	Applicazioni Applications
O1		

MN 887 G

Design
Marelli e Molteni

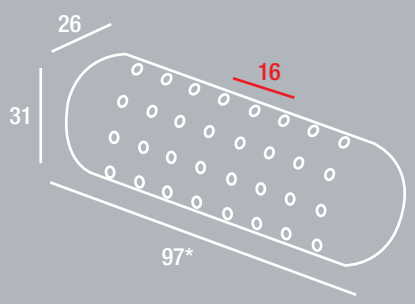

Finiture Finishings	Eps Epoxy Coatings	Applicazioni Applications
O1		

MN 793 Z

Design
Marelli e Molteni

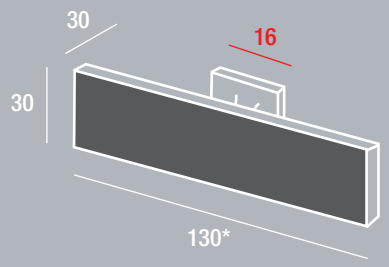

disponibile anche senza applicazione
available also without application

Finiture Finishings	Eps Epoxy Coatings	Applicazioni Applications
G104	E1	L1
G115	E9	L2

MN 793 Z

Design
Marelli e Molteni

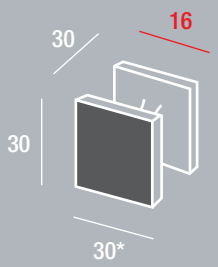

disponibile anche senza applicazione
available also without application

Finiture Finishings	Eps Epoxy Coatings	Applicazioni Applications
G104	E1	L1
G115	E9	L2

MN 890 Z

Design
Marelli e Molteni

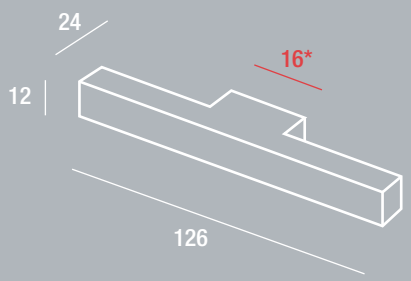

Finiture Finishings	Eps Epoxy Coatings	Applicazioni Applications
G104	E1	
G115	E9	

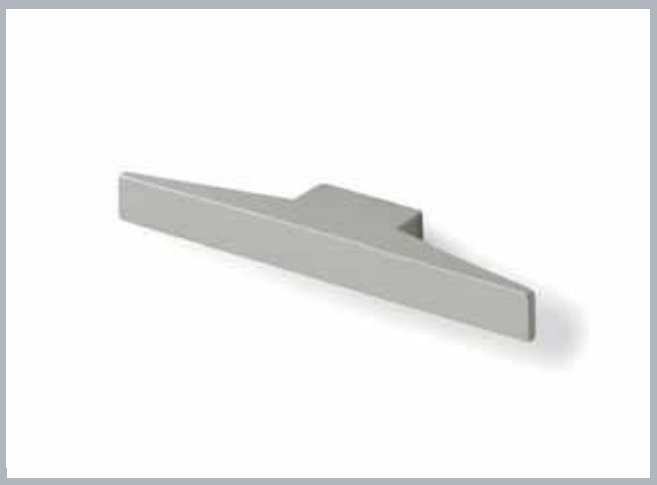

MN 891 Z

Design
Marelli e Molteni

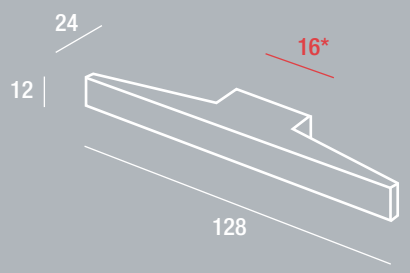

Finiture Finishings	Eps Epoxy Coatings	Applicazioni Applications
G104	E1	
G115	E9	

MN 958 Z

Design
Giuseppe Bavuso

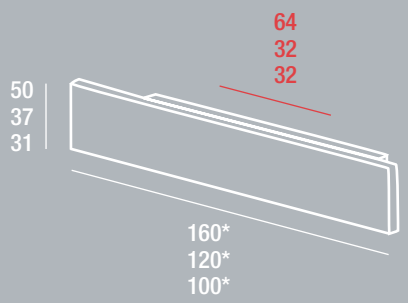

Finiture Finishings	Eps Epoxy Coatings	Applicazioni Applications
G104	E1	
G115	E9	
G176		

MN 971 Z

Design
Klaus Bergen

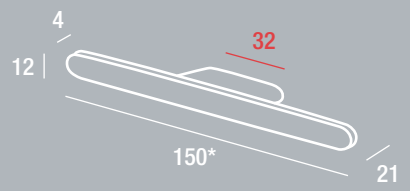

Finiture Finishings	Eps Epoxy Coatings	Applicazioni Applications
G104	E1	
G115	E9	

MN 695 Z

Design
Giuseppe Bavuso

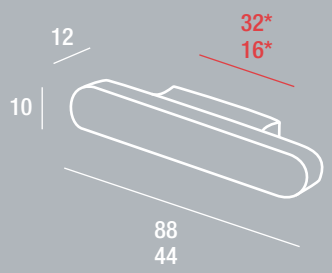

Finiture Finishings	Eps Epoxy Coatings	Applicazioni Applications
G104	E1	
G115	E9	

MN 949 I

Design
Lino Codato

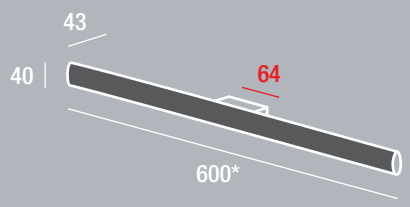

misure su richiesta size on request

Finiture Finishings	Eps Epoxy Coatings	Applicazioni Applications
	E10	E10
	E11	E11
		I1

MN 956 I

Design
Lino Codato

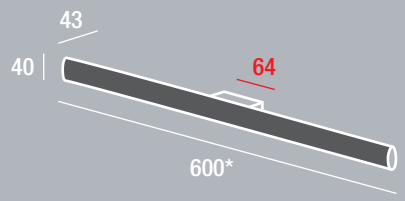

misure su richiesta size on request

Finiture Finishings	Eps Epoxy Coatings	Applicazioni Applications
	E1	U1
	E9	

MN 953 Z

Design
Lino Codato

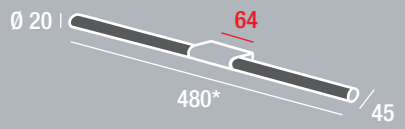

Finiture Finishings	Eps Epoxy Coatings	Applicazioni Applications
G115	E10	E10
	E11	E11
		I1
		X1

MN 435 Z

Design
CRP

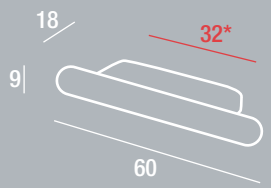

Finiture Finishings	Eps Epoxy Coatings	Applicazioni Applications
G104	E1	
G115	E9	

MN 867 Z

Design
Luigi Vaghi

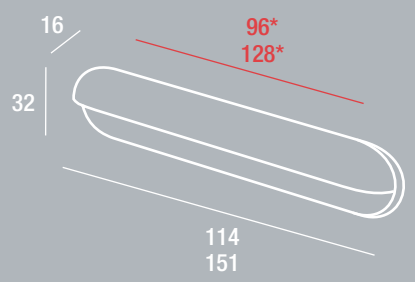

Finiture Finishings	Eps Epoxy Coatings	Applicazioni Applications
G104	E1	
G115	E9	

MN 747 Z

Design
Lino Codato

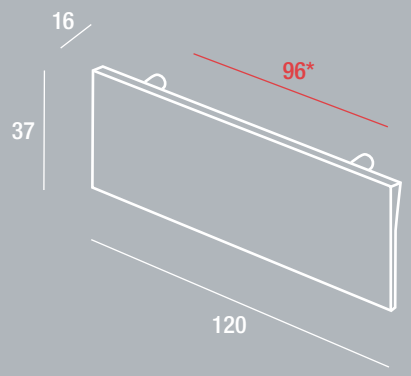

Finiture Finishings	Eps Epoxy Coatings	Applicazioni Applications
G115	E1	
G104	E9	

MN 880 Z

Design
Lino Codato

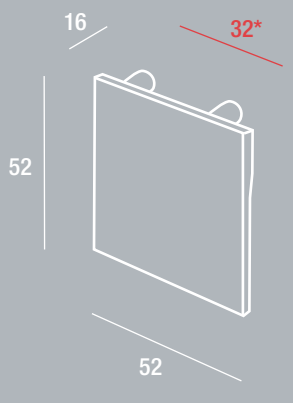

Finiture Finishings	Eps Epoxy Coatings	Applicazioni Applications
G104	E1	
G115	E9	

MN 1005 Z

Design
Giuseppe Bavuso

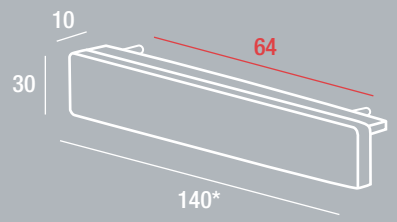

Finiture Finishings	Eps Epoxy Coatings	Applicazioni Applications
G115	E1	
	E9	

MN 1006 Z

Design Giuseppe Bavuso

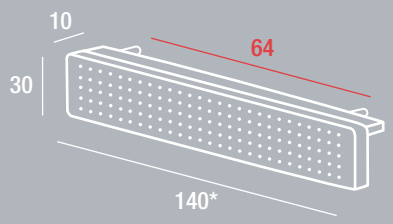

Finiture Finishings	Eps Epoxy Coatings	Applicazioni Applications
G115	E1	
	E9	

MN 1003 Z

Design Giuseppe Bavuso

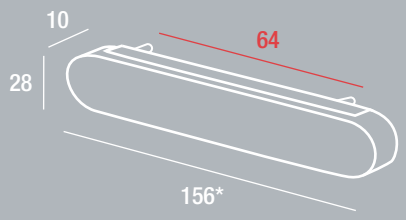

Finiture Finishings	Eps Epoxy Coatings	Applicazioni Applications
G115	E1	
	E9	

MN 1004 Z

Design Giuseppe Bavuso

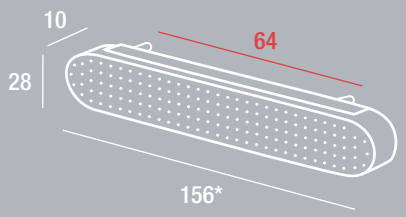

Finiture Finishings	Eps Epoxy Coatings	Applicazioni Applications
G115	E1	
	E9	

MN 946 I

Design Lino Codato

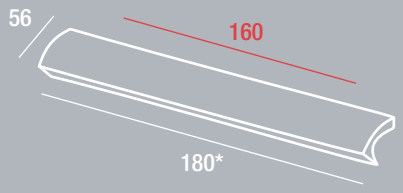

Finiture Finishings	Eps Epoxy Coatings	Applicazioni Applications
I1	E10	
	E11	

misure su richiesta size on request

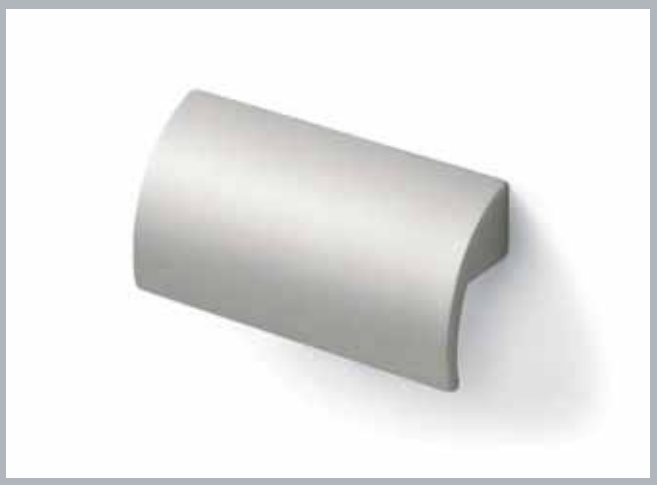

MN 640 Z/I

Design
Marelli e Molteni

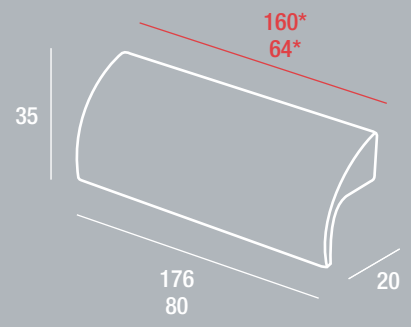

misure su richiesta size on request

Finiture Finishings	Eps Epoxy Coatings	Applicazioni Applications
G104	E1	
G115	E9	
I1	E10	
	E11	

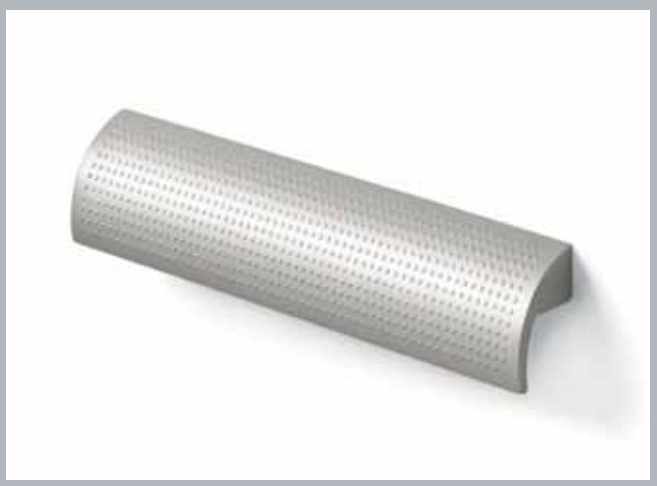

MN 824 Z

Design
Marelli e Molteni

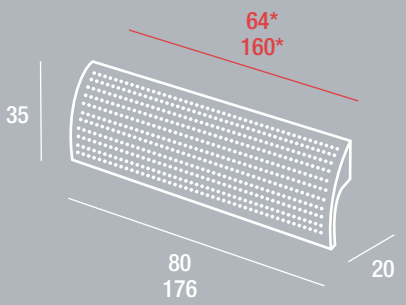

Finiture Finishings	Eps Epoxy Coatings	Applicazioni Applications
G104	E1	
	E9	

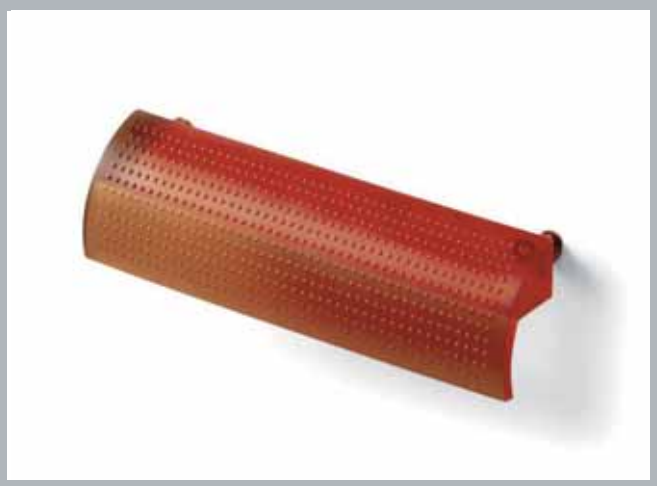

MN 824 A

Design
Marelli e Molteni

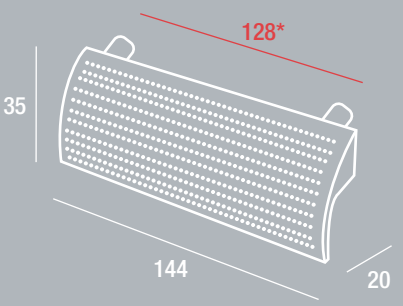

Finiture Finishings	Eps Epoxy Coatings	Applicazioni Applications
A13		

MN 868 Z

Design
Giuseppe Bavuso

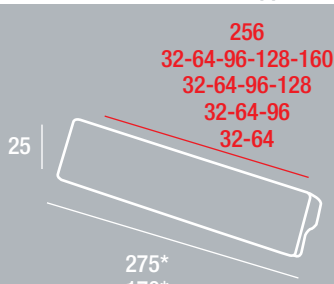

275*
170*
138*
106*
74*

interasse multiplo
multiple inter-axial hole distance

Finiture Finishings	Eps Epoxy Coatings	Applicazioni Applications
G104	E1	
G115	E9	

MN 868 Z

Design Giuseppe Bavuso

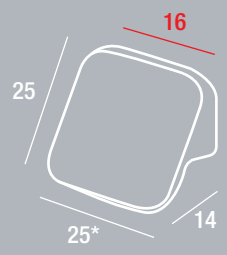

Finiture Finishings	Eps Epoxy Coatings	Applicazioni Applications
G104	E1	
G115	E9	

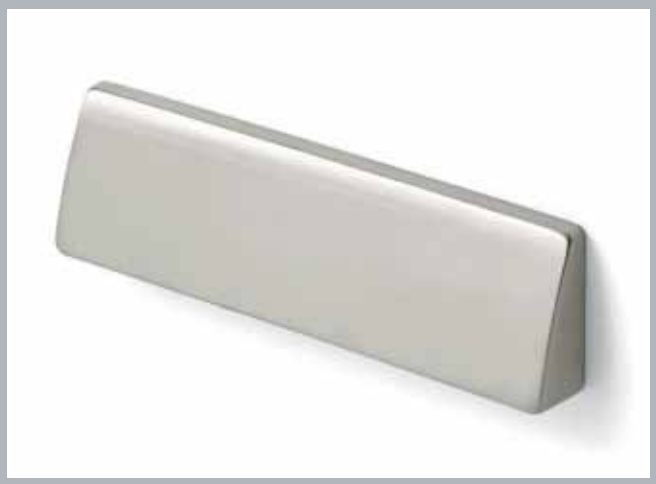

MN 788 Z

Design CRP

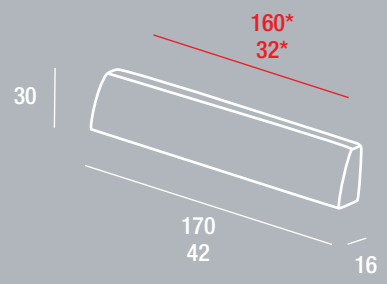

Finiture Finishings	Eps Epoxy Coatings	Applicazioni Applications
G115	E1	
	E9	

MN 861 Z

Design Giuseppe Bavuso

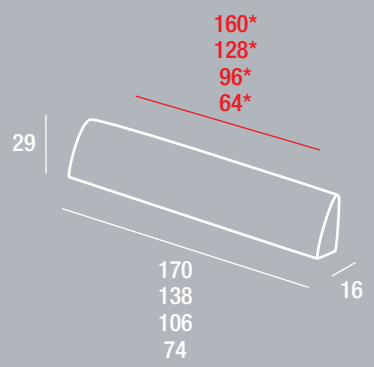

Finiture Finishings	Eps Epoxy Coatings	Applicazioni Applications
G104	E1	
G115	E9	

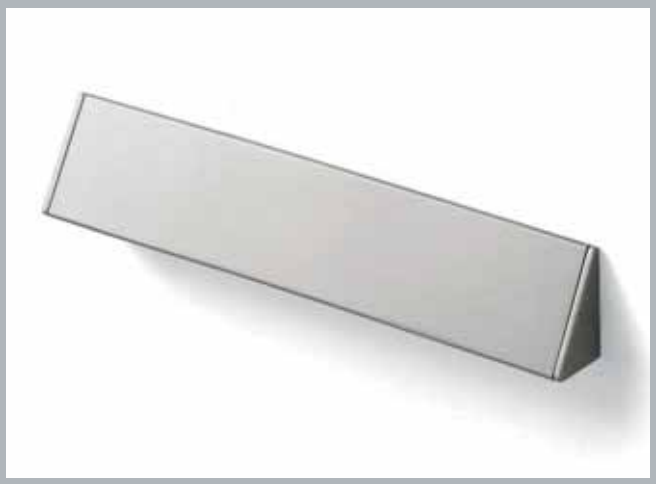

MN 862 I

Design Giuseppe Bavuso

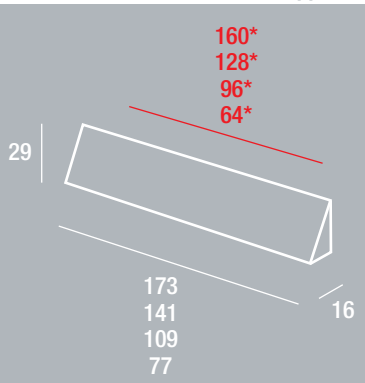

misure su richiesta size on request

Finiture Finishings	Eps Epoxy Coatings	Applicazioni Applications
	E10	
	E11	

MN 752 Z

Design
Luigi Vaghi

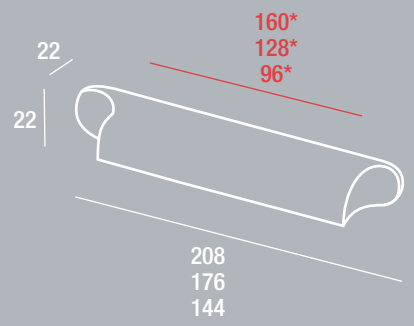

Finiture Finishings	Eps Epoxy Coatings	Applicazioni Applications
G104	E1	
G115	E9	

MN 582 Z

Design
CRP

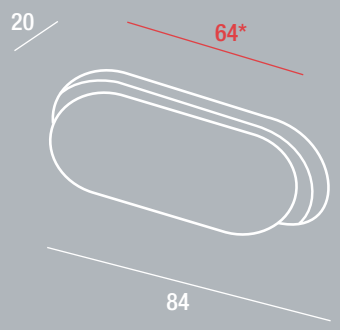

Finiture Finishings	Eps Epoxy Coatings	Applicazioni Applications
G104	E1	
G115	E9	

MN 701 Z

Design
CRP

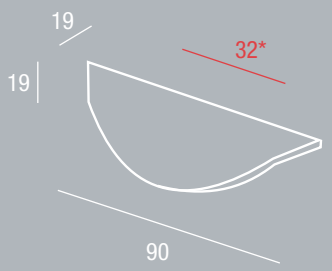

Finiture Finishings	Eps Epoxy Coatings	Applicazioni Applications
G104	E1	
G115	E9	

MN 687 Z

Design
Giuseppe Bavuso

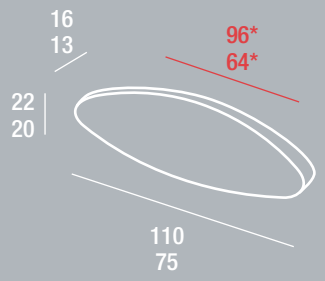

Finiture Finishings	Eps Epoxy Coatings	Applicazioni Applications
G104	E1	
G115	E9	

MN 395 Z

Design CRP

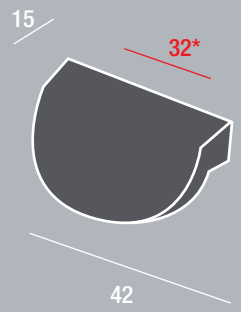

disponibile anche senza applicazione
available also without application

Finiture Finishings	Eps Epoxy Coatings	Applicazioni Applications
G104	E1	U1
G115	E9	

MN 606 Z

Design CRP

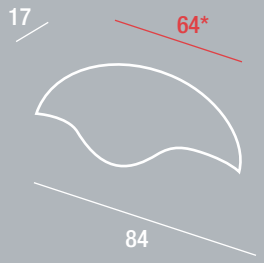

Finiture Finishings	Eps Epoxy Coatings	Applicazioni Applications
G104	E1	
G115	E9	

MN 2032 design Lino Codato

maniglie e pomoli incasso . built-in handles and knobs

MN 2032 Z

Design
Lino Codato

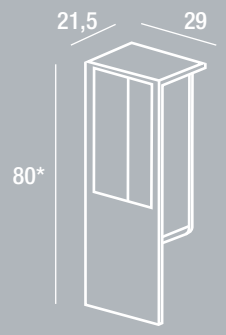

Finiture Finishings	Eps Epoxy Coatings	Applicazioni Applications
G104	E1	
G171	E9	
G172		

MN 1132 I

Design
Marelli e Molteni

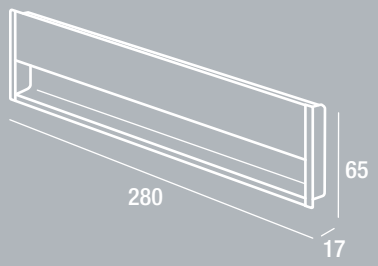

misure su richiesta size on request

Finiture Finishings	Eps Epoxy Coatings	Applicazioni Applications
	E10	
	E11	

MN 1157 I

Design
Ettore Tinagli

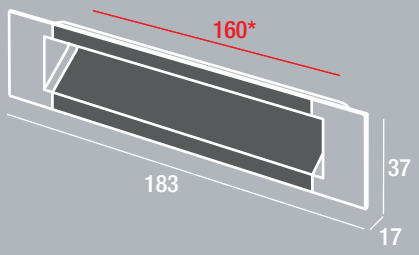

misure su richiesta size on request

Finiture Finishings	Eps Epoxy Coatings	Applicazioni Applications
G104	E10	E10
G115	E11	E11
		I1
		I2

MN 2001 I

Design
CRP

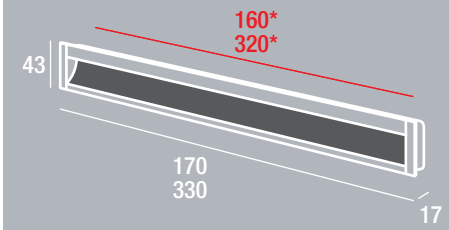

misure su richiesta size on request

Finiture Finishings	Eps Epoxy Coatings	Applicazioni Applications
G104	E10	E10
	E11	E11
		I1
		I2

MN 1167 Z

Design CRP

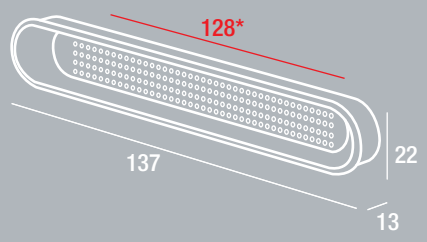

Finiture Finishings	Eps Epoxy Coatings	Applicazioni Applications
	E1	
	E9	

MN 1160 Z

Design Pinuccio Borgonovo

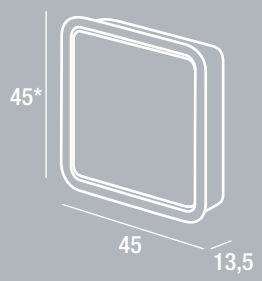

Finiture Finishings	Eps Epoxy Coatings	Applicazioni Applications
G104	E1	
G115	E9	

MN 1161 Z

Design Pinuccio Borgonovo

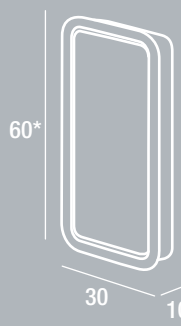

Finiture Finishings	Eps Epoxy Coatings	Applicazioni Applications
G104	E1	
G115	E9	

MN 1106 Z

Design Pinuccio Borgonovo

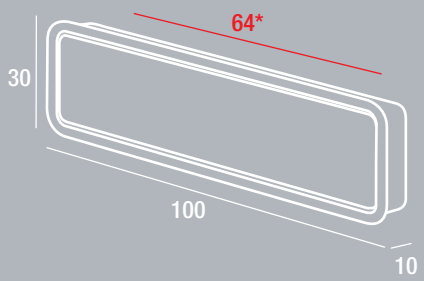

Finiture Finishings	Eps Epoxy Coatings	Applicazioni Applications
G104	E1	
G115	E9	

MN 1031 Z
Design Jo Coenen

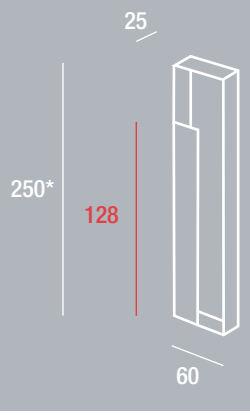

Finiture Finishings	Eps Epoxy Coatings	Applicazioni Applications
G171	E1	E1
	E9	E9
		G171

PO 450 Z
Design CRP

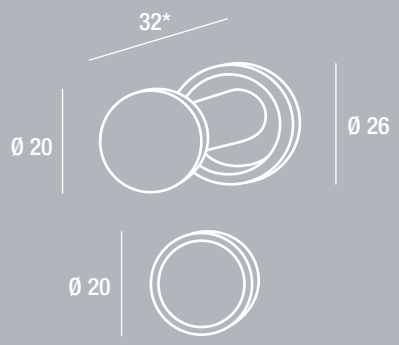

Finiture Finishings	Eps Epoxy Coatings	Applicazioni Applications
	E1	
	E9	

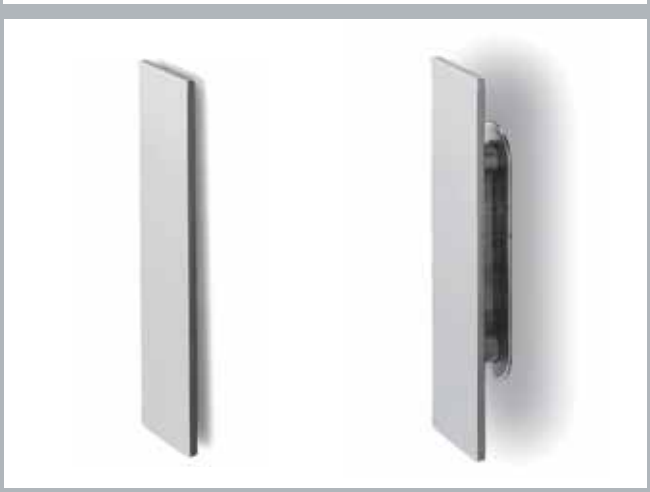

MN 1026 Z
Design Giuseppe Bavuso

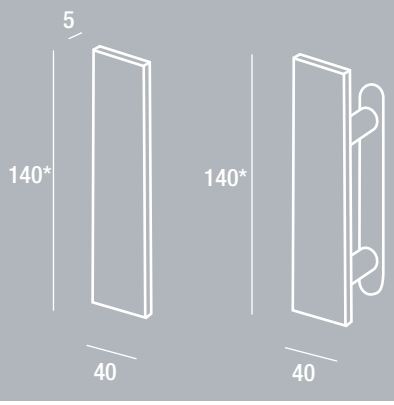

Finiture Finishings	Eps Epoxy Coatings	Applicazioni Applications
G104	E1	
G115	E9	
	E10	
	E11	

MN 1027 Z
Design Adriani e Rossi

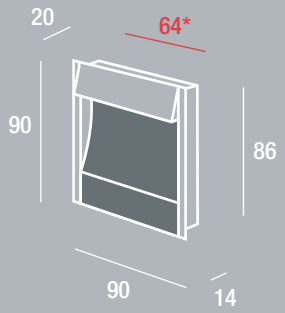

Finiture Finishings	Eps Epoxy Coatings	Applicazioni Applications
G104	E1	E1
G115	E9	E9
G171		G104
		G115
		G171

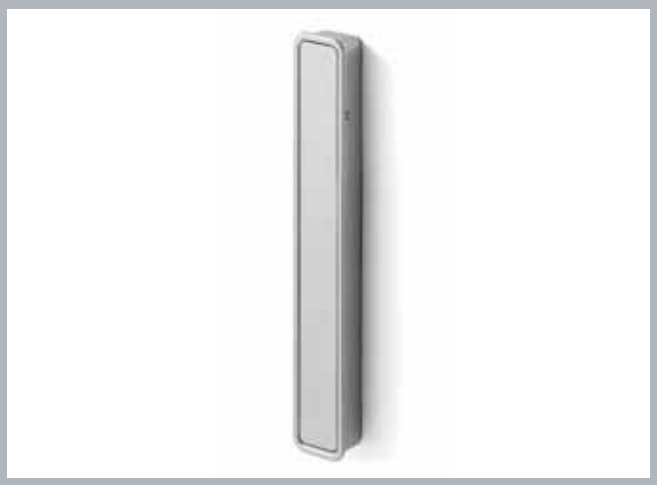

MN 1032 Z

Design Pinuccio Borgonovo

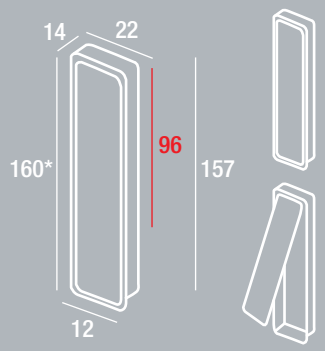

Finiture Finishings	Eps Epoxy Coatings	Applicazioni Applications
G104	E1	
G115	E9	
G171	E10	
	E11	

MN 1025 Z

Design Pinuccio Borgonovo

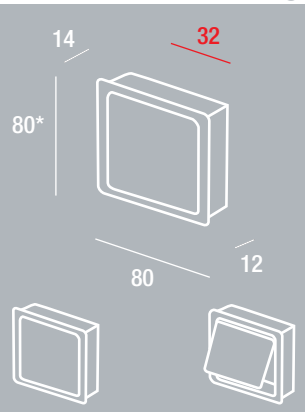

Finiture Finishings	Eps Epoxy Coatings	Applicazioni Applications
G104	E1	
G115	E9	
	E10	
	E11	

MN 808 Z

Design Giuseppe Bavuso

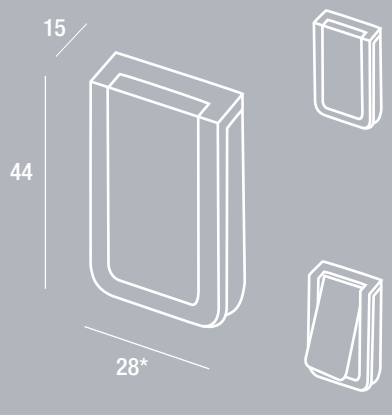

Finiture Finishings	Eps Epoxy Coatings	Applicazioni Applications
G104	E1	
	E9	

MN 807 Z

Design Giuseppe Bavuso

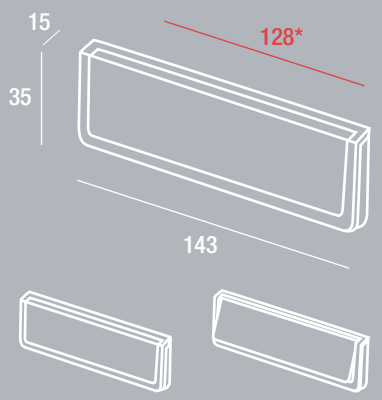

Finiture Finishings	Eps Epoxy Coatings	Applicazioni Applications
G104	E1	
	E9	

MN 814 Z

Design Giuseppe Bavuso

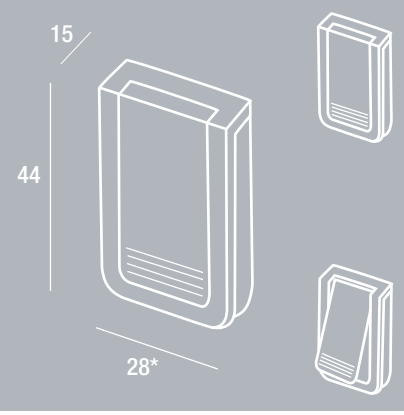

Finiture Finishings	Eps Epoxy Coatings	Applicazioni Applications
	E1	
	E9	

MN 815 Z

Design Giuseppe Bavuso

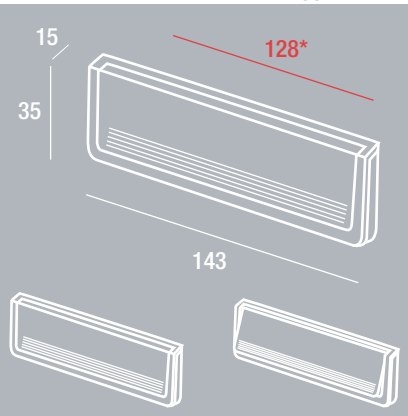

Finiture Finishings	Eps Epoxy Coatings	Applicazioni Applications
	E1	
	E9	

MN 959 Z

Design Pinuccio Borgonovo

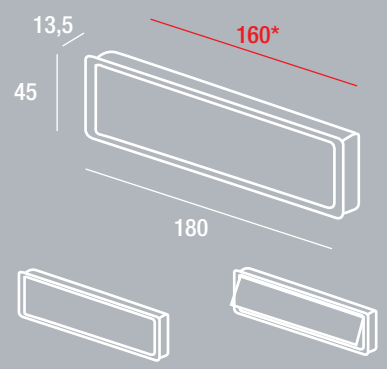

Finiture Finishings	Eps Epoxy Coatings	Applicazioni Applications
G104	E1	
G115	E9	

MN 1010 Z

Design Pinuccio Borgonovo

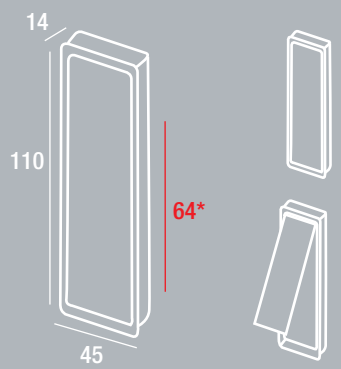

Finiture Finishings	Eps Epoxy Coatings	Applicazioni Applications
G104	E1	
G115	E9	

MN 721 Z

Design
Marelli e Molteni

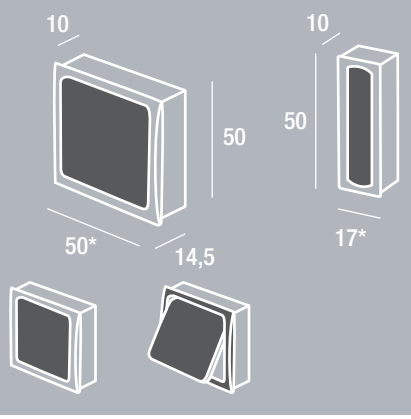

Finiture Finishings	Eps Epoxy Coatings	Applicazioni Applications
G104	E1	A10
G115	E9	E1
		E9
		G104
		G115

MN 721 Z

Design
Marelli e Molteni

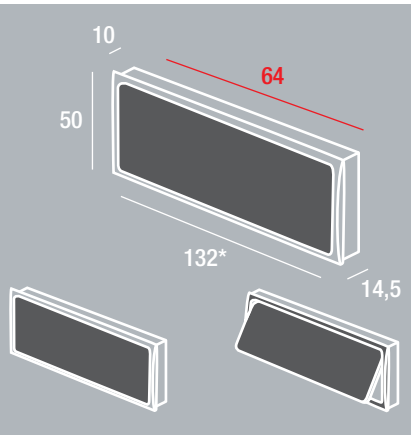

Finiture Finishings	Eps Epoxy Coatings	Applicazioni Applications
G104	E1	A10
G115	E9	E1
		E9
		G104
		G115

MN 920 Z

Design
Giuseppe Bavuso

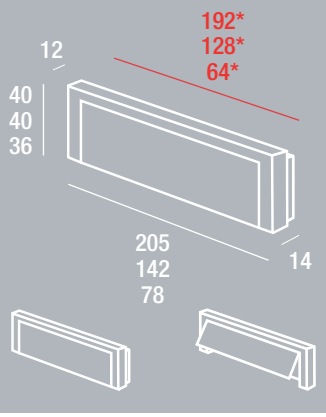

Finiture Finishings	Eps Epoxy Coatings	Applicazioni Applications
G171	E1	
	E9	

MN 921 Z

Design
Giuseppe Bavuso

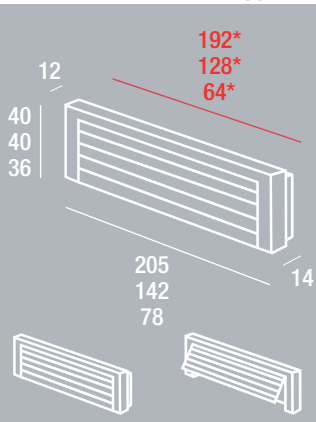

Finiture Finishings	Eps Epoxy Coatings	Applicazioni Applications
G171	E1	
	E9	

MN 922 Z

Design
Giuseppe Bavuso

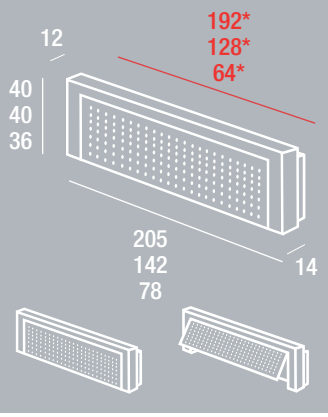

Finiture Finishings	Eps Epoxy Coatings	Applicazioni Applications
G171	E1	
	E9	

MN 321 Z

Design
Fabio Redaelli

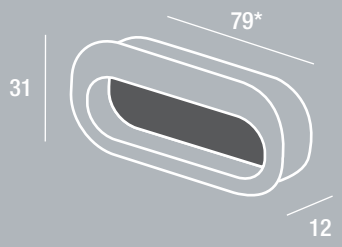

Finiture Finishings	Eps Epoxy Coatings	Applicazioni Applications
G104	E1	E1
G115	E9	E9
G150		G115
G171		G171

MN 295 Z

Design
Fabio Redaelli

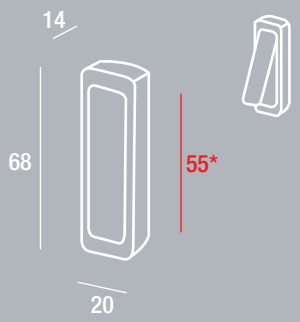

Finiture Finishings	Eps Epoxy Coatings	Applicazioni Applications
G104	E1	
G115	E9	

MN 503 Z

Design
CRP

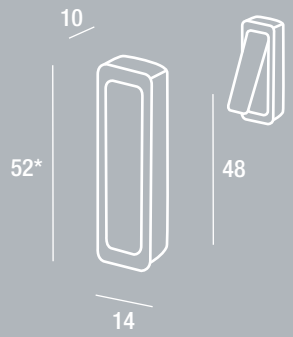

Finiture Finishings	Eps Epoxy Coatings	Applicazioni Applications
G104	E1	
G115	E9	

MN 918 I

Design
Giuseppe Bavuso

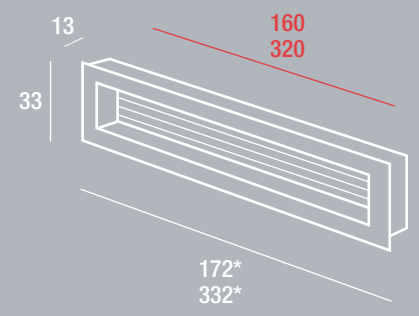

misure su richiesta size on request

Finiture Finishings	Eps Epoxy Coatings	Applicazioni Applications
	E10	
	E11	

MN 469 Z

Design
CRP

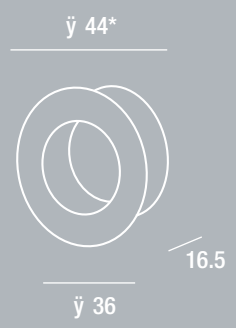

Finiture Finishings	Eps Epoxy Coatings	Applicazioni Applications
G104	E1	
G115	E9	

MN 897 Z

Design
Marelli e Molteni

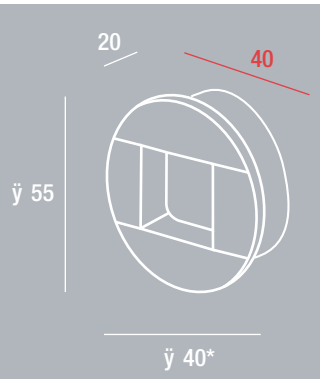

Finiture Finishings	Eps Epoxy Coatings	Applicazioni Applications
G171	E1	E1
	E9	E9
		G171
		L1
		L2

MN 898 Z

Design
Marelli e Molteni

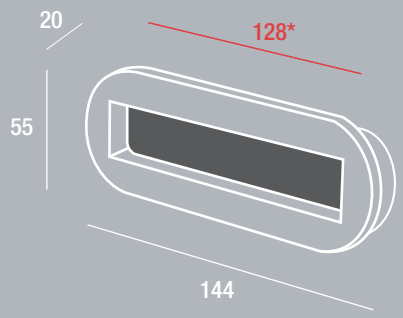

Finiture Finishings	Eps Epoxy Coatings	Applicazioni Applications
G171	E1	E1
	E9	E9
		G171
		L1
		L2

MN 1142 Z

Design
Gordon Guillaumier

Finiture Finishings	Eps Epoxy Coatings	Applicazioni Applications
G104	E10	
G115	E11	

MN 729 Z

Design
Marelli e Molteni

Finiture Finishings	Eps Epoxy Coatings	Applicazioni Applications
	E1	E1
	E9	E9

MN 729 Z

Design
Marelli e Molteni

Finiture Finishings	Eps Epoxy Coatings	Applicazioni Applications
	E1	L1
	E9	L2

MN 714 Z

Design
Marelli e Molteni

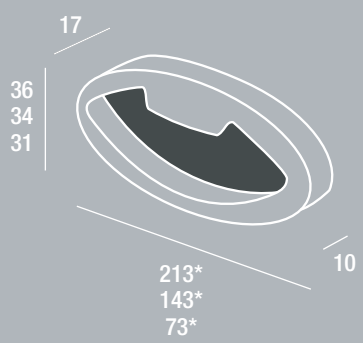

Finiture Finishings	Eps Epoxy Coatings	Applicazioni Applications
G104	E1	E1
G115	E9	E9
		L1
		L2

MN 713 Z

Design
Marelli e Molteni

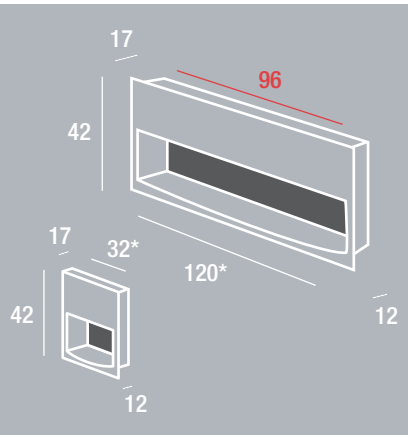

Finiture Finishings	Eps Epoxy Coatings	Applicazioni Applications
G104	E1	E1
G115	E9	E9
		G104
		G115
		L1
		L2

MN 800 Z

Design
Marelli e Molteni

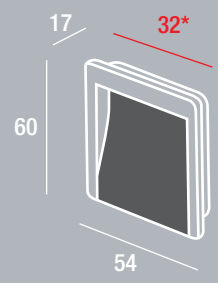

Finiture Finishings	Eps Epoxy Coatings	Applicazioni Applications
G104	E1	E1
G115	E9	E9
		G104
		G115

MN 800 Z

Design
Marelli e Molteni

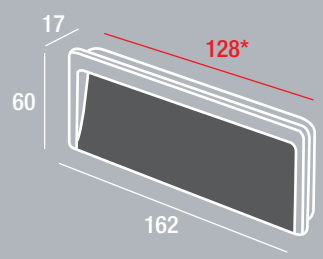

Finiture Finishings	Eps Epoxy Coatings	Applicazioni Applications
G104	E1	E1
G115	E9	E9
		G104
		G115

MN 802 Z

Design
Giuseppe Bavuso

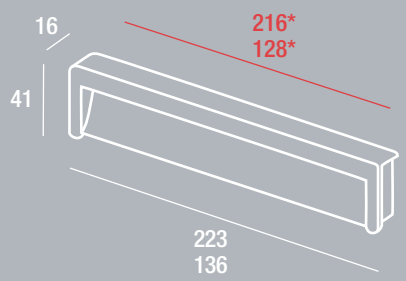

Finiture Finishings	Eps Epoxy Coatings	Applicazioni Applications
	E1	E10
	E9	E11
	E10	
	E11	

MN 926 Z

Design CRP

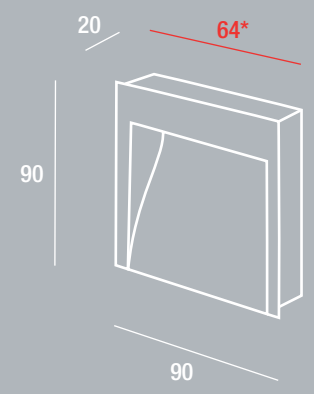

Finiture Finishings	Eps Epoxy Coatings	Applicazioni Applications
G104	E1	E1
G1115	E9	E9
G171		G104
		G115
		G171

MN 689 Z

Design Luigi Vaghi

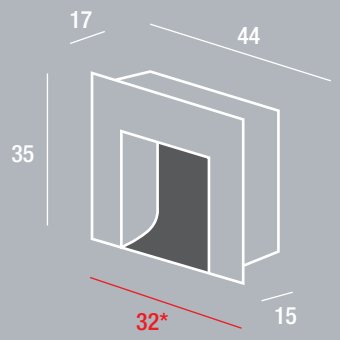

Finiture Finishings	Eps Epoxy Coatings	Applicazioni Applications
G104	E1	E1
G115	E9	E9
G171		G104
		G115
		G171

MN 689 Z

Design Luigi Vaghi

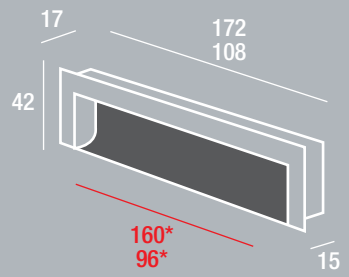

Finiture Finishings	Eps Epoxy Coatings	Applicazioni Applications
G104	E1	E1
G115	E9	E9
G171		G104
		G115
		G171

MN 704 Z

Design Luigi Vaghi

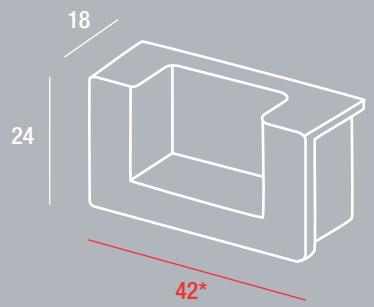

Finiture Finishings	Eps Epoxy Coatings	Applicazioni Applications
	E1	
	E9	

MN 1001 I

Design Giuseppe Bavuso

Finiture Finishings	Eps Epoxy Coatings	Applicazioni Applications
	E10	
	E11	

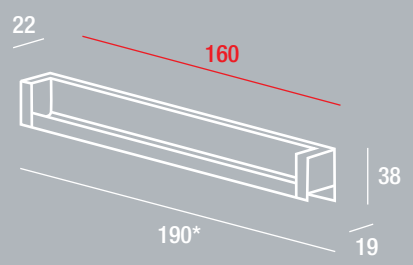

misure su richiesta size on request

MN 809 I

Design Giuseppe Bavuso

Finiture Finishings	Eps Epoxy Coatings	Applicazioni Applications
	E10	
	E11	

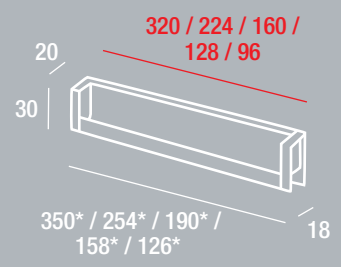

misure su richiesta size on request

MN 732 I

Design Giuseppe Bavuso

Finiture Finishings	Eps Epoxy Coatings	Applicazioni Applications
	E10	
	E11	

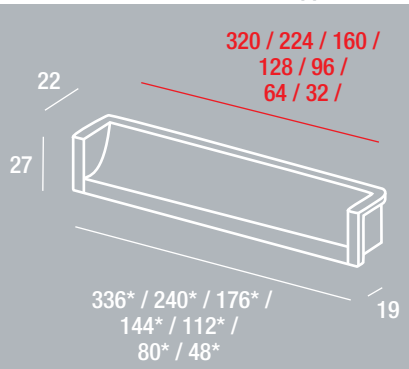

misure su richiesta size on request

MN 743 Z

Pamar CRP

Finiture Finishings	Eps Epoxy Coatings	Applicazioni Applications
	E1	
	E9	
	E10	
	E11	

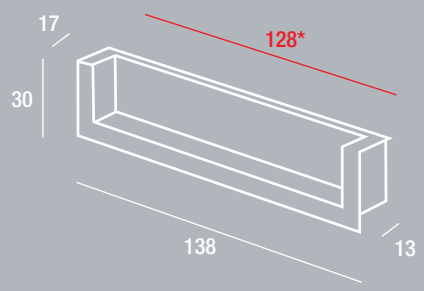

MN 744 Z

Design CRP

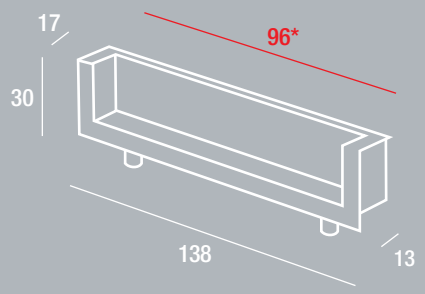

Finiture Finishings	Eps Epoxy Coatings	Applicazioni Applications
	E10	
	E11	
	E1	
	E9	

MN 748 Z

Design CRP

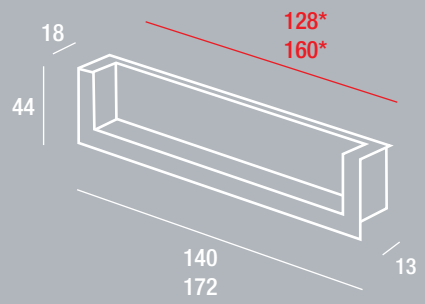

Finiture Finishings	Eps Epoxy Coatings	Applicazioni Applications
	E10	
	E11	

MN 750 Z

Design CRP

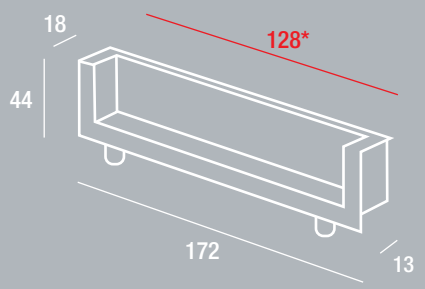

Finiture Finishings	Eps Epoxy Coatings	Applicazioni Applications
	E10	
	E11	

MN 1019 Z

Design CRP

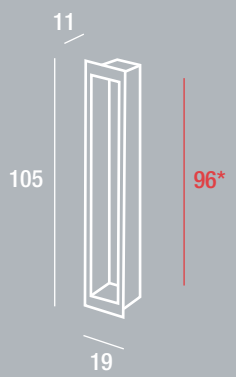

Finiture Finishings	Eps Epoxy Coatings	Applicazioni Applications
G171	E1	
	E9	
	E10	
	E11	

MN 2061design Gordon Guillaumier

maniglie e pomoli vari . various handles and knobs

MN 2061 C

Design
Gordon Guillaumier

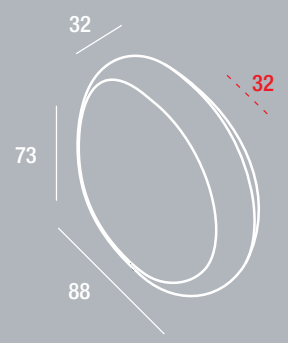

Finiture Finishings	Eps Epoxy Coatings	Applicazioni Applications
N1		

PO 2009 C

Design
Gordon Guillaumier

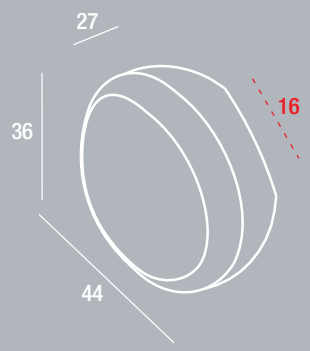

Finiture Finishings	Eps Epoxy Coatings	Applicazioni Applications
N1		

MN 799 Z

Design
Marelli e Molteni

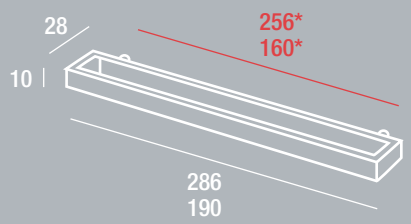

Finiture Finishings	Eps Epoxy Coatings	Applicazioni Applications
G104	E1	
G171	E9	

MN 798 Z

Design
Marelli e Molteni

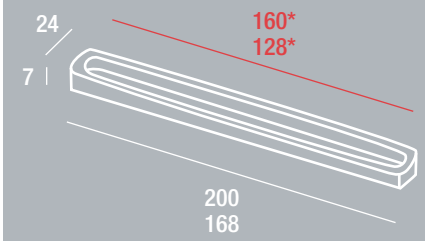

Finiture Finishings	Eps Epoxy Coatings	Applicazioni Applications
G104	E1	
G171	E9	

MN 803 Z

Design
Marelli e Molteni

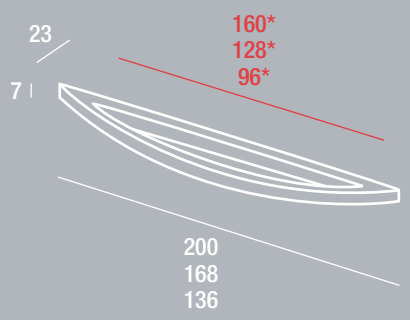

Finiture Finishings	Eps Epoxy Coatings	Applicazioni Applications
G104	E1	
G171	E9	

MN 875 Z

Design
CRP

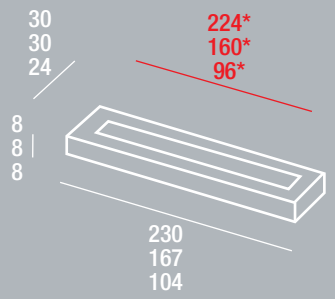

Finiture Finishings	Eps Epoxy Coatings	Applicazioni Applications
G104	E1	
G171	E9	

MN 1086 Z

Design
Sung Sook Kim

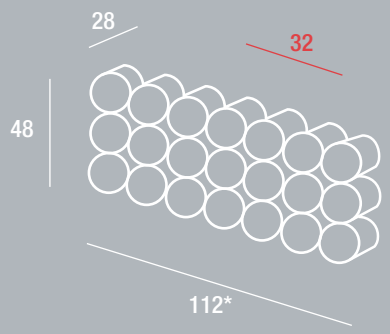

Finiture Finishings	Eps Epoxy Coatings	Applicazioni Applications
G104	E1	
G115	E9	
G174		

MN 1089 Z

Design
Marco Zanuso Jr.

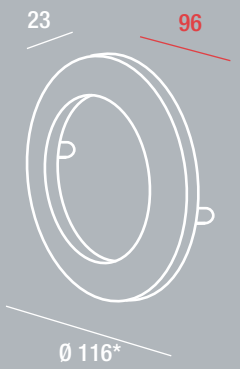

Finiture Finishings	Eps Epoxy Coatings	Applicazioni Applications
G104	E1	
G171	E9	

MN 960 Z

Design
Pinuccio Borgonovo

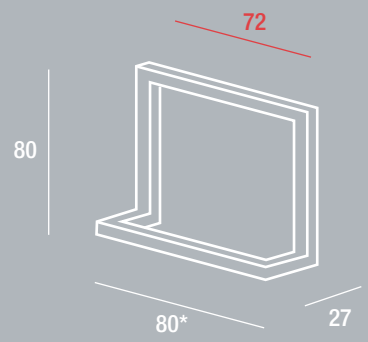

Finiture Finishings	Eps Epoxy Coatings	Applicazioni Applications
G104	E1	
G171	E9	

MN 763 Z

Design
Marelli e Molteni

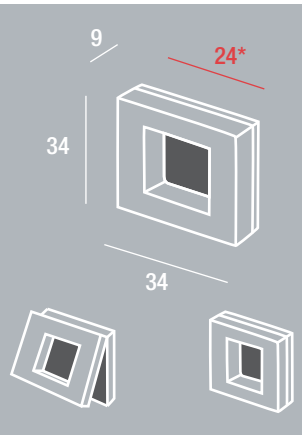

Finiture Finishings	Eps Epoxy Coatings	Applicazioni Applications
G104	E1	E1
G115	E9	E9
		G104
		G115

MN 762 Z

Design
Marelli e Molteni

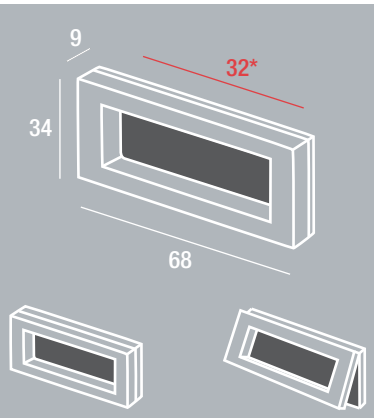

Finiture Finishings	Eps Epoxy Coatings	Applicazioni Applications
G104	E1	E1
G115	E9	E9
		G104
		G115

MN 761 Z

Design
Marelli e Molteni

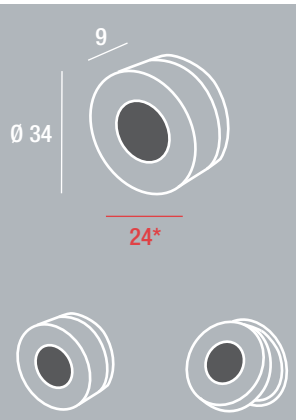

Finiture Finishings	Eps Epoxy Coatings	Applicazioni Applications
G104	E1	E1
G115	E9	E9
		G104
		G115

MN 372 Z

Design CRP

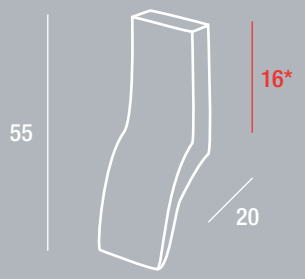

Finiture Finishings	Eps Epoxy Coatings	Applicazioni Applications
G104	E1	
G115	E9	

MN 910 Z

Design Marelli e Molteni

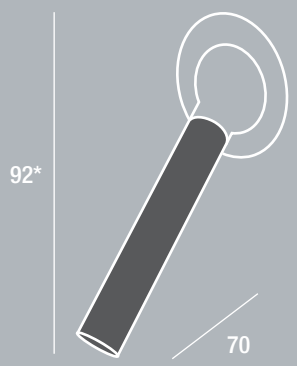

Finiture Finishings	Eps Epoxy Coatings	Applicazioni Applications
G104	E1	E1
G115	E9	E9
		G104
		G115

MN 569 U

Design CRP

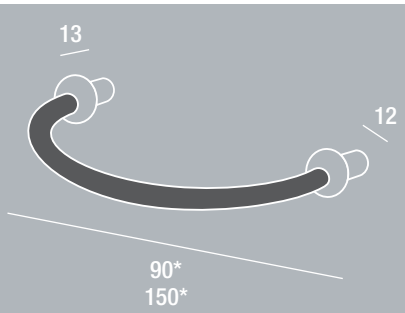

Finiture Finishings	Eps Epoxy Coatings	Applicazioni Applications
U4		E1
		E9
		G104
		G115

MN 655 Z

Design CRP

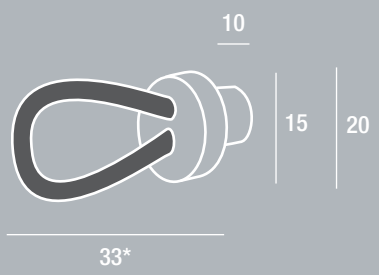

Finiture Finishings	Eps Epoxy Coatings	Applicazioni Applications
G104	E1	U4
G115	E9	

MN 400 Z

Design CRP

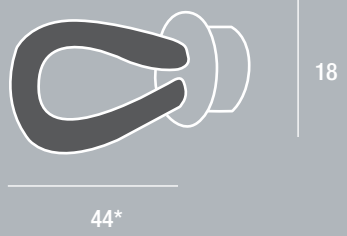

Finiture Finishings	Eps Epoxy Coatings	Applicazioni Applications
G104	E1	U4
G115	E9	

MN 633 Z

Design CRP

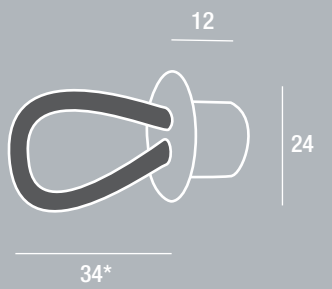

Finiture Finishings	Eps Epoxy Coatings	Applicazioni Applications
G104	E1	U4
G115	E9	

MN 634 Z

Design CRP

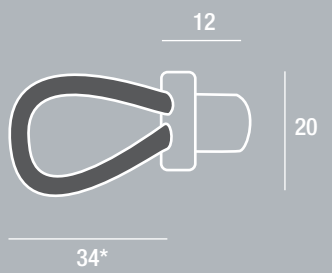

Finiture Finishings	Eps Epoxy Coatings	Applicazioni Applications
G104	E1	U4
G115	E9	

MN 1158 design Pinuccio Borgonovo

maniglie per porte scorrevoli . sliding door handles

MN 1096 Z

Design
Pinuccio Borgonovo

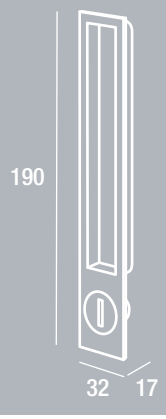

Finiture Finishings	Eps Epoxy Coatings	Applicazioni Applications
G104	E10	
	E11	

MN 1096 Z

Design
Pinuccio Borgonovo

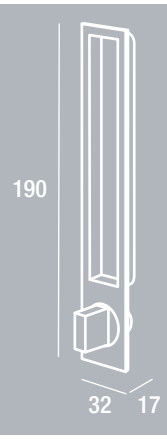

Finiture Finishings	Eps Epoxy Coatings	Applicazioni Applications
G104	E10	
	E11	

MN 1097 Z

Design
Pinuccio Borgonovo

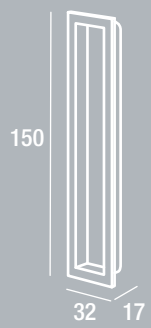

Finiture Finishings	Eps Epoxy Coatings	Applicazioni Applications
G104	E10	
	E11	

MN 1158 Z

Design
Pinuccio Borgonovo

Finiture Finishings	Eps Epoxy Coatings	Applicazioni Applications
G104	E10	
	E11	

MN 1098 Z

Design Pinuccio Borgonovo

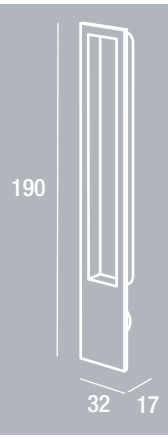

Finiture Finishings	Eps Epoxy Coatings	Applicazioni Applications
G104	E10	
	E11	

MN 1099 Z

Design Pinuccio Borgonovo

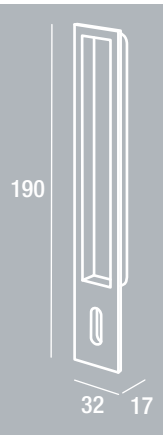

Finiture Finishings	Eps Epoxy Coatings	Applicazioni Applications
G104	E10	
	E11	

MN 1100 Z

Design Pinuccio Borgonovo

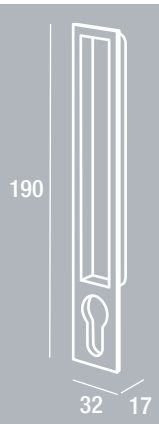

Finiture Finishings	Eps Epoxy Coatings	Applicazioni Applications
G104	E10	
	E11	

PO 473 design Gordon Guillaumier

pomoli . knobs

PO 473 Z

Design
Gordon Guillaumier

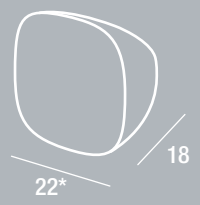

Finiture Finishings	Eps Epoxy Coatings	Applicazioni Applications
G104	E1	
G115	E9	

PO 475 Z

Design
Gordon Guillaumier

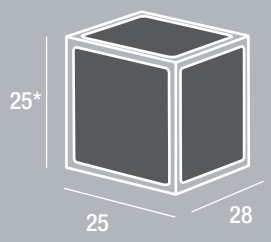

Finiture Finishings	Eps Epoxy Coatings	Applicazioni Applications
G104	E1	U1
	E9	L4

PO 2010 O

Design
Sung Sook Kim

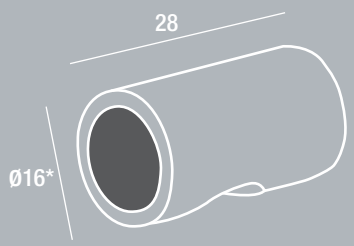

Finiture Finishings	Eps Epoxy Coatings	Applicazioni Applications
G104	E1	C1
G140	E9	C2
G174		
GP008		

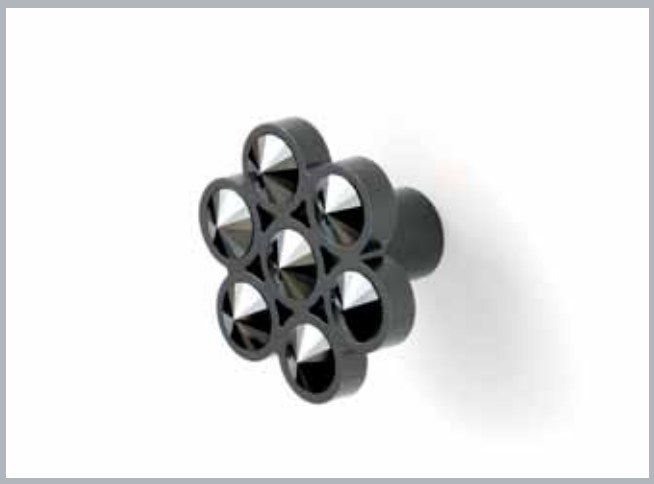

PO 2008 Z

Design
Sung Sook Kim

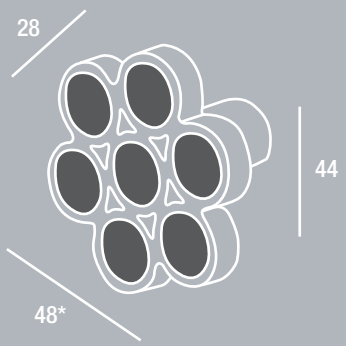

Finiture Finishings	Eps Epoxy Coatings	Applicazioni Applications
G104	E1	C1
G140	E9	C2
G174		
GP008		

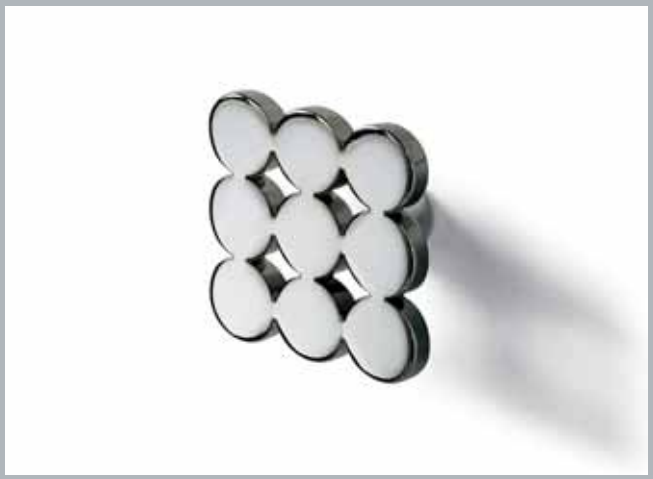

PO 467 Z

Design
Sung Sook Kim

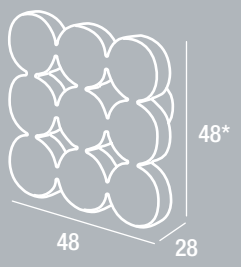

Finiture Finishings	Eps Epoxy Coatings	Applicazioni Applications
G104	E1	
G115	E9	
GR024		

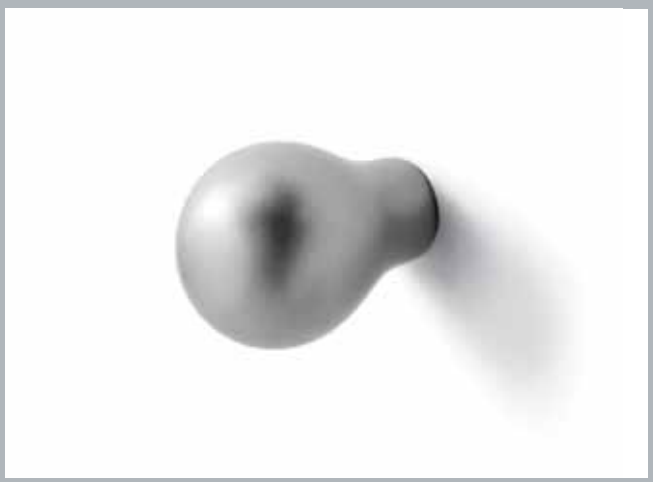

PO 295 O

Design
CRP

Finiture Finishings	Eps Epoxy Coatings	Applicazioni Applications
G104	E1	
G115	E9	

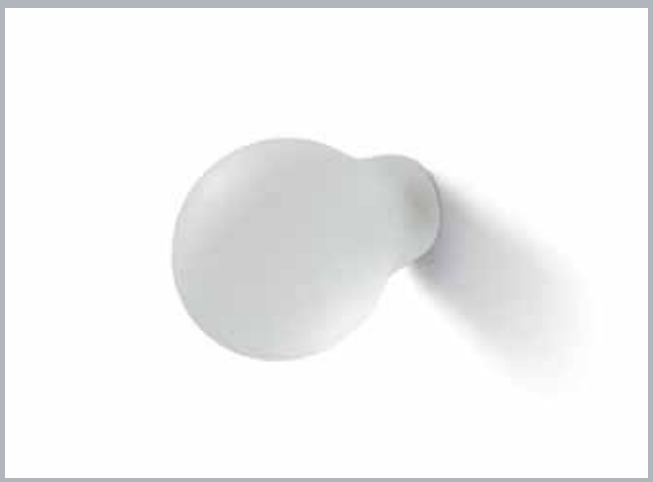

PO 301 R

Design
CRP

Finiture Finishings	Eps Epoxy Coatings	Applicazioni Applications
R1		

PO 214 O

Design
CRP

Finiture Finishings	Eps Epoxy Coatings	Applicazioni Applications
G104	E1	
G115	E9	

PO 64 O

Design CRP

36
31
26
20

30*
25*
20*
15*

Finiture Finishings	Eps Epoxy Coatings	Applicazioni Applications
G104	E1	
G115	E9	

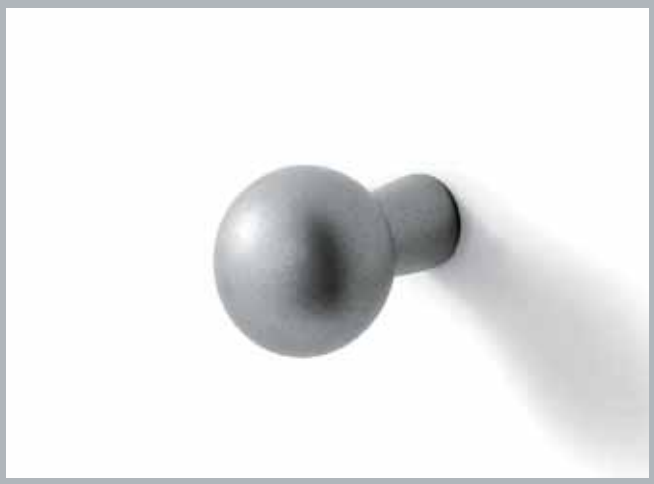

PO 179 O

Design CRP

30

18*

Finiture Finishings	Eps Epoxy Coatings	Applicazioni Applications
G104	E1	
G115	E9	

PO 179 O

Design CRP

18

12*

Finiture Finishings	Eps Epoxy Coatings	Applicazioni Applications
G104	E1	
G115	E9	

PO 340 O

Design Marelli e Molteni

26
22

22*
17*

Finiture Finishings	Eps Epoxy Coatings	Applicazioni Applications
G104	E1	
G115	E9	

PO 340 O

Design
Marelli e Molteni

26
22

22*
17*

Finiture Finishings	Eps Epoxy Coatings	Applicazioni Applications
G104	E1	L1
G115	E9	L2

PO 218 O

Design
CRP

22

13*

Finiture Finishings	Eps Epoxy Coatings	Applicazioni Applications
G104	E1	
G115	E9	

PO 417 A/G

Design
CRP

28
21

32*
22*

Finiture Finishings	Eps Epoxy Coatings	Applicazioni Applications
A13		E1
O1		

PO 418 G

Design
Marelli e Molteni

24

33*

Finiture Finishings	Eps Epoxy Coatings	Applicazioni Applications
O1		

PO 290 O

Design
CRP

24

15*

Finiture Finishings	Eps Epoxy Coatings	Applicazioni Applications
G104	E1	
G115	E9	

PO 289 Z

Design
CRP

31
24
22

25*
20*
15*

Finiture Finishings	Eps Epoxy Coatings	Applicazioni Applications
G104	E1	
G115	E9	

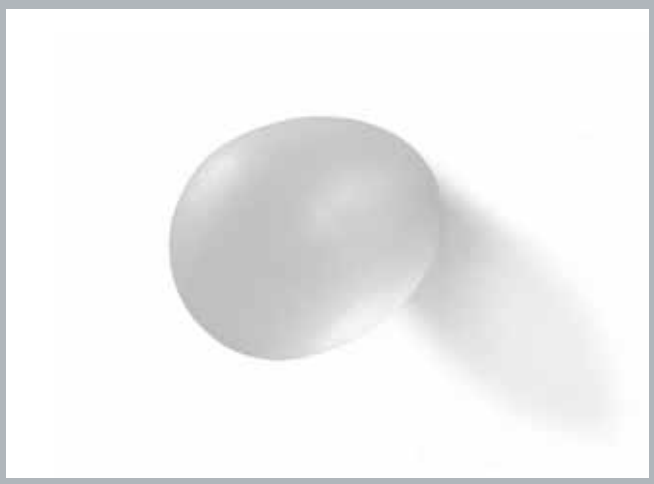

PO 300 R

Design
CRP

31
24

25*
20*

Finiture Finishings	Eps Epoxy Coatings	Applicazioni Applications
R1		

PO 428 Z

Design
Marelli e Molteni

21

33*

17

Finiture Finishings	Eps Epoxy Coatings	Applicazioni Applications
G9	E1	
G115	E9	

PO 374 Z

Design
CRP

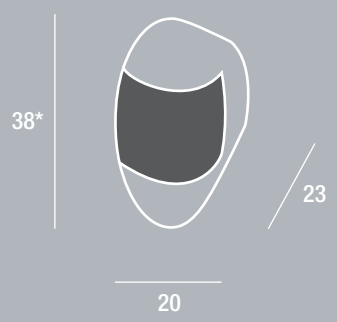

Finiture Finishings	Eps Epoxy Coatings	Applicazioni Applications
G104	E1	A10
G115	E9	L1
		L2

PO 414 Z

Design
Luigi Vaghi

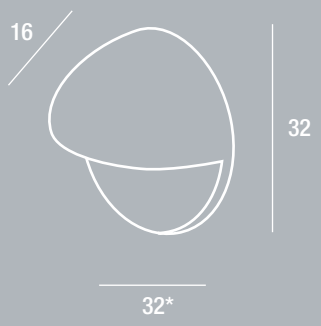

Finiture Finishings	Eps Epoxy Coatings	Applicazioni Applications
G104	E1	
G115	E9	

PO 435 Z

Design
Lino Codato

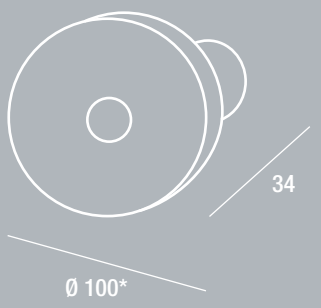

Finiture Finishings	Eps Epoxy Coatings	Applicazioni Applications
G104	E1	
G171	E9	

PO 434 Z

Design
Lino Codato

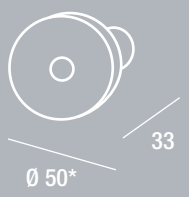

Finiture Finishings	Eps Epoxy Coatings	Applicazioni Applications
G104	E1	
G115	E9	
G171		

PO 395 Z

Design
Marelli e Molteni

Finiture Finishings	Eps Epoxy Coatings	Applicazioni Applications
G104	E1	L1
G115	E9	L2

PO 393 Z

Design
Marelli e Molteni

Finiture Finishings	Eps Epoxy Coatings	Applicazioni Applications
G104	E1	L1
G115	E9	L2

PO 440 Z

Design
Klaus Bergen

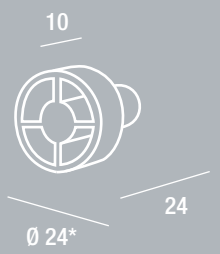

Finiture Finishings	Eps Epoxy Coatings	Applicazioni Applications
G171	E1	
	E9	

PO 436 Z

Design
Klaus Bergen

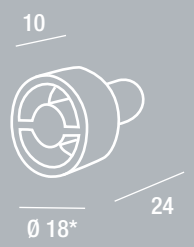

Finiture Finishings	Eps Epoxy Coatings	Applicazioni Applications
G171	E1	
	E9	

PO 207 O

Design CRP

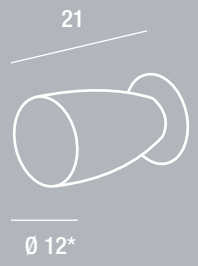

Finiture Finishings	Eps Epoxy Coatings	Applicazioni Applications
G104	E1	
G115	E9	

PO 217 O

Design CRP

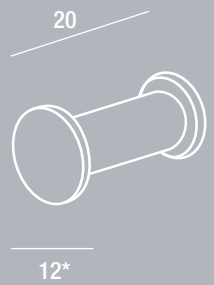

Finiture Finishings	Eps Epoxy Coatings	Applicazioni Applications
G104	E1	
G115	E9	

PO 190 O

Design CRP

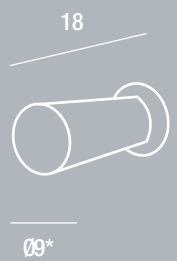

Finiture Finishings	Eps Epoxy Coatings	Applicazioni Applications
G104	E1	
G115	E9	

PO 226 O

Design CRP

Finiture Finishings	Eps Epoxy Coatings	Applicazioni Applications
G104	E1	
G115	E9	

PO 225 O

Design
CRP

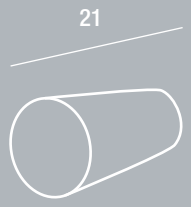

Ø13*

Finiture Finishings	Eps Epoxy Coatings	Applicazioni Applications
G104	E1	
G115	E9	

PO 3 O

Design
CRP

Ø17*
Ø15*

Finiture Finishings	Eps Epoxy Coatings	Applicazioni Applications
G104	E1	
G115	E9	

PO 341 O

Design
Marelli e Molteni

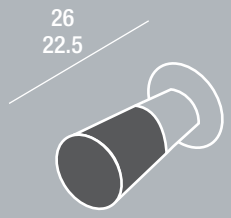

19*
11*

Finiture Finishings	Eps Epoxy Coatings	Applicazioni Applications
G104	E1	A13
G115	E9	

PO 341 O

Design
Marelli e Molteni

19*
11*

Finiture Finishings	Eps Epoxy Coatings	Applicazioni Applications
G104	E1	
G115	E9	

PO 341 O

Design
Marelli e Molteni

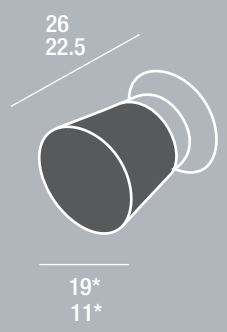

Finiture Finishings	Eps Epoxy Coatings	Applicazioni Applications
G104	E1	L1
G115	E9	L2

PO 378 O

Design
Marelli e Molteni

Finiture Finishings	Eps Epoxy Coatings	Applicazioni Applications
G104	E1	L1
G115	E9	L2
		R1

PO 292 O

Design
CRP

Finiture Finishings	Eps Epoxy Coatings	Applicazioni Applications
G104	E1	
G115	E9	

PO 464 Z

Design
Gordon Guillaumier

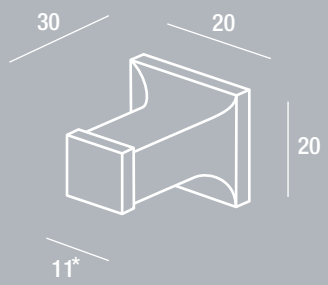

Finiture Finishings	Eps Epoxy Coatings	Applicazioni Applications
G104	E1	
G115	E9	
GR024		

PO 456 O

Design
Gordon Guillaumier

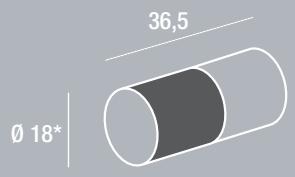

Finiture Finishings	Eps Epoxy Coatings	Applicazioni Applications
G104	E1	E1
G115	E9	E9
		G104
		G115
		L1
		L2

PO 454 Z

Design
Gordon Guillaumier

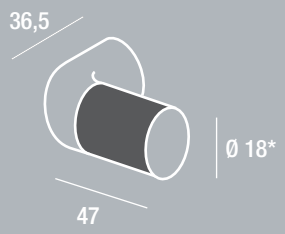

Finiture Finishings	Eps Epoxy Coatings	Applicazioni Applications
G104	E1	E1
G115	E9	E9
		G104
		G115
		L1
		L2

PO 410 Z

Design
Marelli e Molteni

Finiture Finishings	Eps Epoxy Coatings	Applicazioni Applications
G104	E1	L1
G115	E9	L2

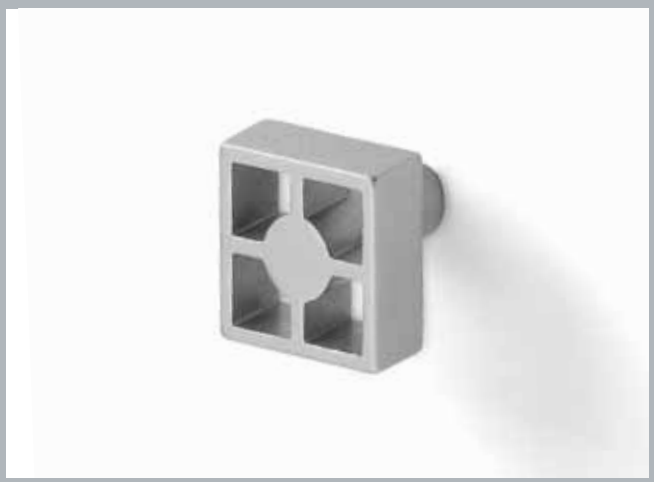

PO 439 Z

Design
Klaus Bergen

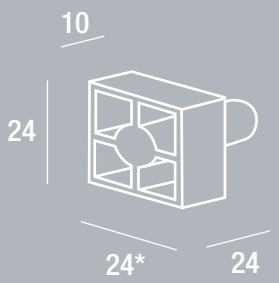

Finiture Finishings	Eps Epoxy Coatings	Applicazioni Applications
G171	E1	
	E9	

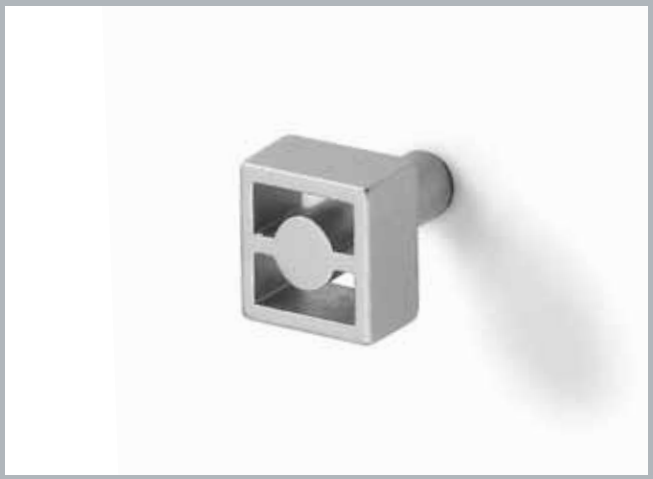

PO 437 Z

Design
Klaus Bergen

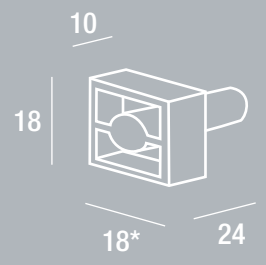

Finiture Finishings	Eps Epoxy Coatings	Applicazioni Applications
G171	E1	
	E9	

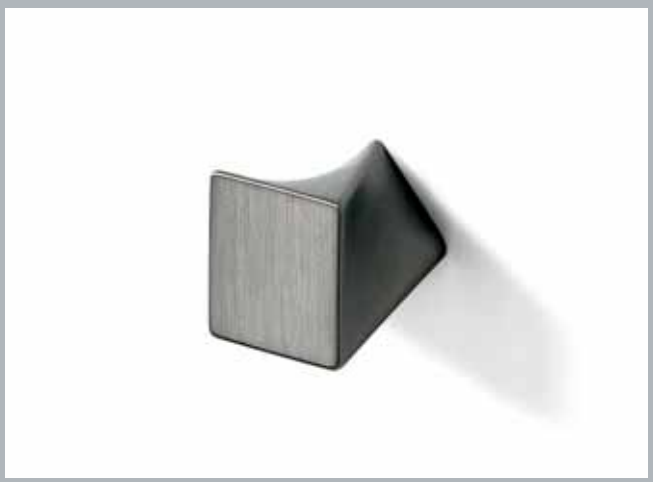

PO 416 Z

Design
CRP

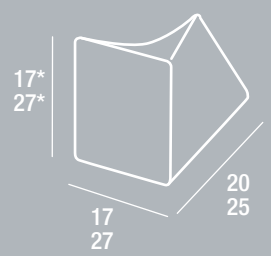

Finiture Finishings	Eps Epoxy Coatings	Applicazioni Applications
G104	E1	
G115	E9	

PO 319 Z

Design
Marelli e Molteni

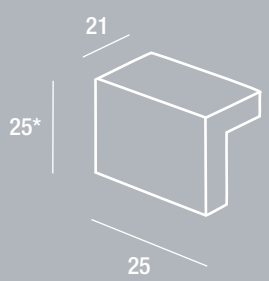

Finiture Finishings	Eps Epoxy Coatings	Applicazioni Applications
G104	E1	
G115	E9	
G124		

PO 366 Z

Design
Marelli e Molteni

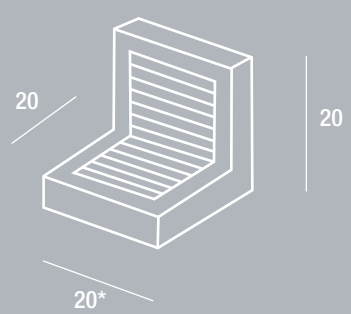

Finiture Finishings	Eps Epoxy Coatings	Applicazioni Applications
	E1	
	E9	

PO 403 Z

Design
Marelli e Molteni

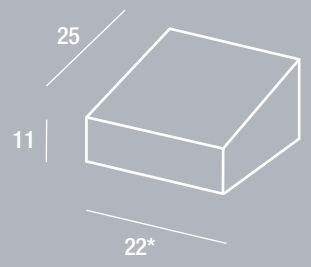

Finiture Finishings	Eps Epoxy Coatings	Applicazioni Applications
G104	E1	
G115	E9	

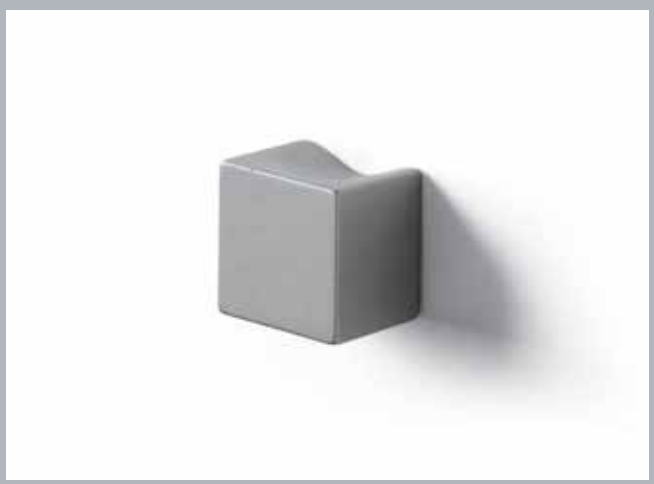

PO 459 Z

Design
Gordon Guillaumier

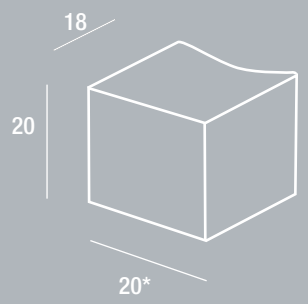

Finiture Finishings	Eps Epoxy Coatings	Applicazioni Applications
G104	E1	
G115	E9	
G124		

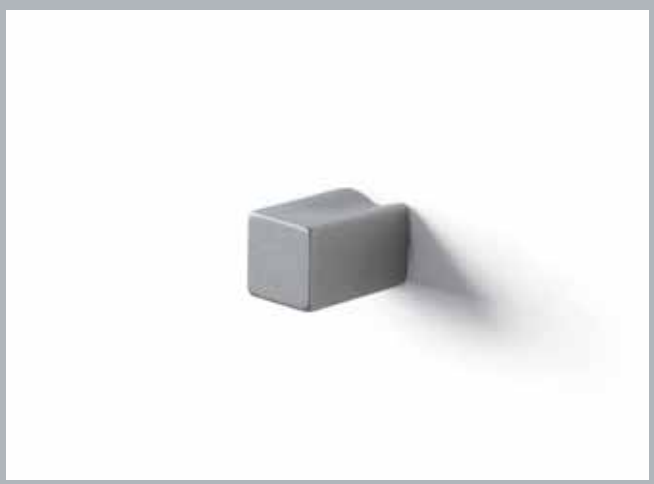

PO 459 Z

Design
Gordon Guillaumier

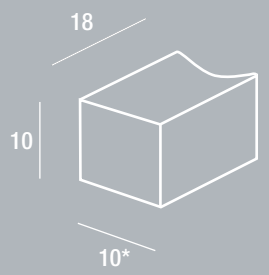

Finiture Finishings	Eps Epoxy Coatings	Applicazioni Applications
G104	E1	
G115	E9	
G124		

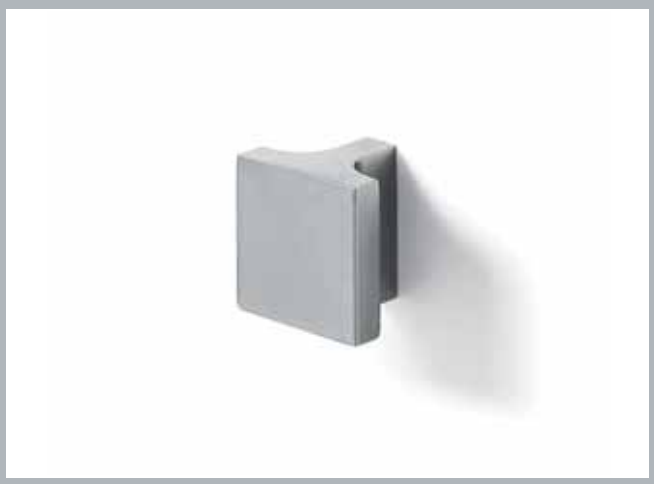

PO 451 Z

Design
Gordon Guillaumier

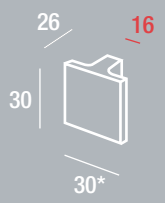

Finiture Finishings	Eps Epoxy Coatings	Applicazioni Applications
G104	E1	
G115	E9	

PO 325 Z

Design
Marelli e Molteni

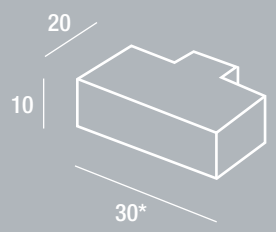

Finiture Finishings	Eps Epoxy Coatings	Applicazioni Applications
G104	E1	
G115	E9	

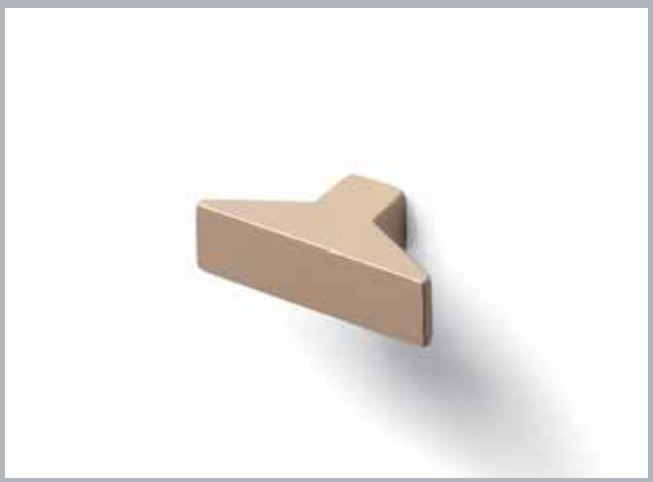

PO 424 Z

Design
Marelli e Molteni

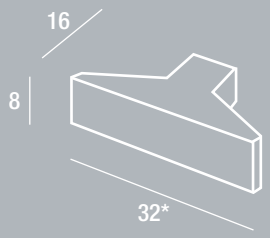

Finiture Finishings	Eps Epoxy Coatings	Applicazioni Applications
G104	E1	
G115	E9	

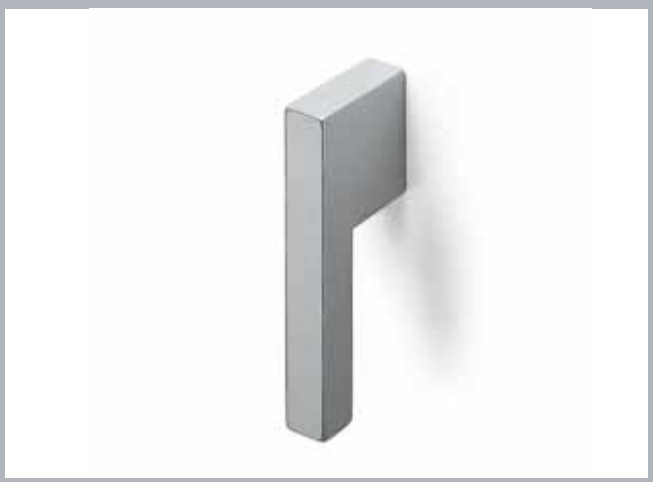

PO 433 Z

Design
Marelli e Molteni

Finiture Finishings	Eps Epoxy Coatings	Applicazioni Applications
G104	E1	
G115	E9	

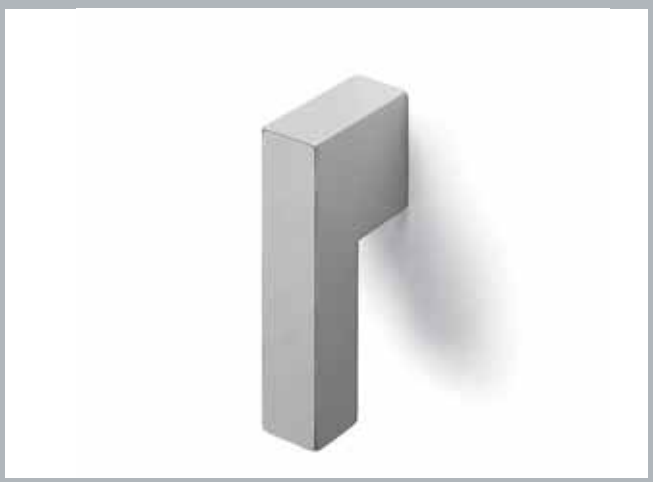

PO 432 Z

Design
Marelli e Molteni

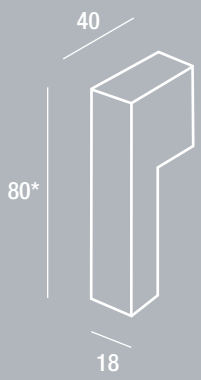

Finiture Finishings	Eps Epoxy Coatings	Applicazioni Applications
G104	E1	
G115	E9	

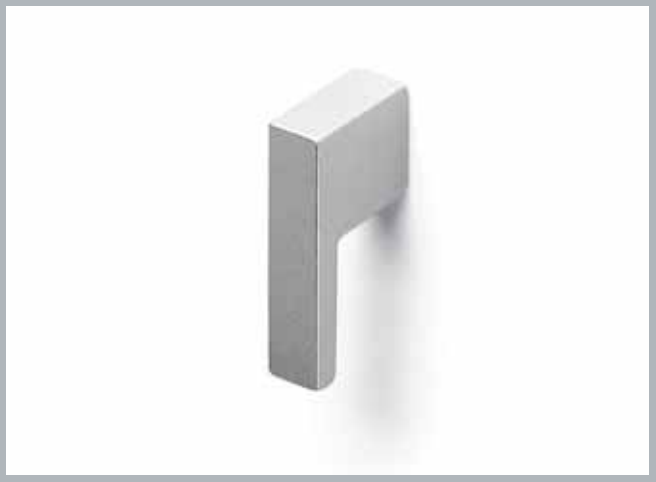

PO 313 Z

Design
Marelli e Molteni

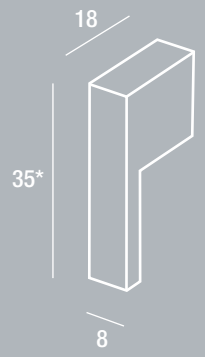

Finiture Finishings	Eps Epoxy Coatings	Applicazioni Applications
G104	E1	
G115	E9	

PO 314 Z

Design
Marelli e Molteni

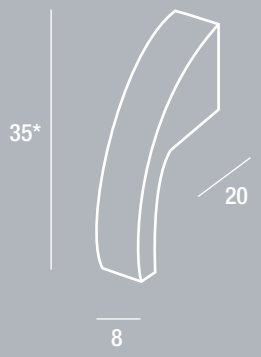

Finiture Finishings	Eps Epoxy Coatings	Applicazioni Applications
G104	E1	
G115	E9	

PO 351 Z

Design
Giuseppe Bavuso

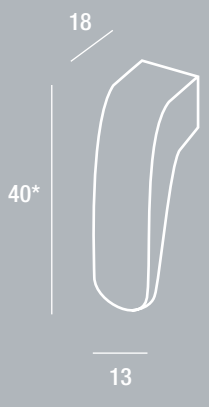

Finiture Finishings	Eps Epoxy Coatings	Applicazioni Applications
G104	E1	
G115	E9	

PO 371 Z

Design
Marelli e Molteni

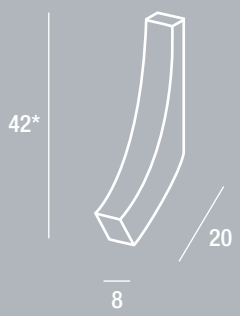

Finiture Finishings	Eps Epoxy Coatings	Applicazioni Applications
G104	E1	
G115	E9	

PO 323 Z

Design
Marelli e Molteni

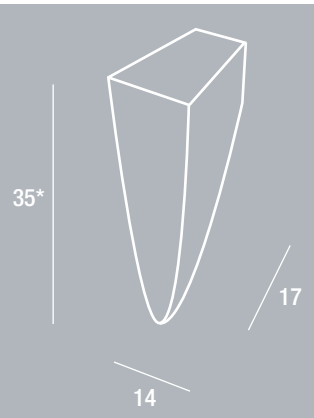

Finiture Finishings	Eps Epoxy Coatings	Applicazioni Applications
G104	E1	
G115	E9	

PO 361 Z

Design
Marelli e Molteni

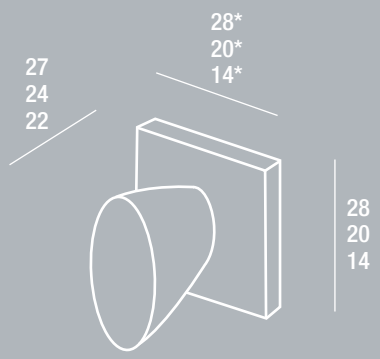

Finiture Finishings	Eps Epoxy Coatings	Applicazioni Applications
G104	E1	
G171	E9	

PO 362 Z

Design
Marelli e Molteni

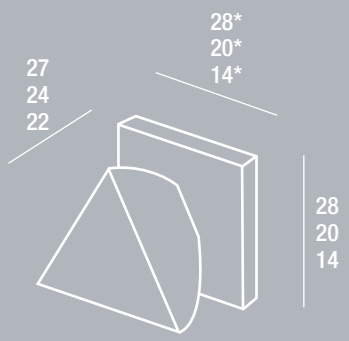

Finiture Finishings	Eps Epoxy Coatings	Applicazioni Applications
G104	E1	
G171	E9	

PO 363 Z

Design
Marelli e Molteni

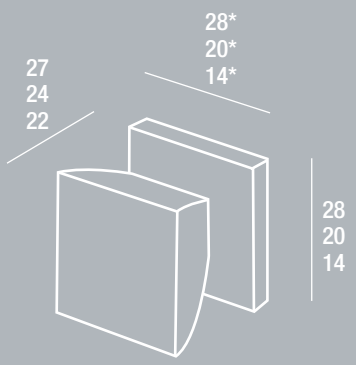

Finiture Finishings	Eps Epoxy Coatings	Applicazioni Applications
G104	E1	
G171	E9	

PO 309 Z

Design
CRP

Finiture Finishings	Eps Epoxy Coatings	Applicazioni Applications
G104	E1	
G115	E9	

PO 336 Z

Design
Giuseppe Bavuso

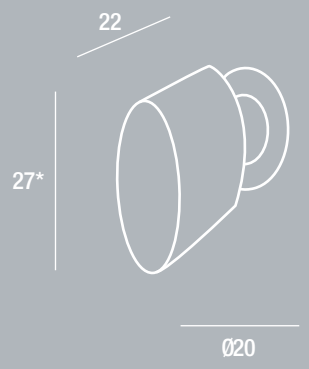

Finiture Finishings	Eps Epoxy Coatings	Applicazioni Applications
G104	E1	
G115	E9	

PO 346 Z

Design
Giuseppe Bavuso

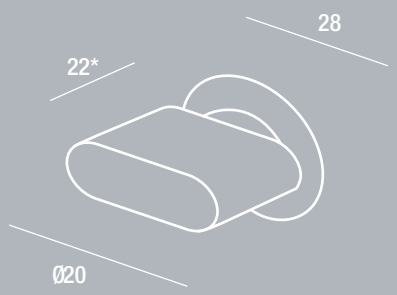

Finiture Finishings	Eps Epoxy Coatings	Applicazioni Applications
G104	E1	
G115	E9	

PO 310 Z

Design
CRP

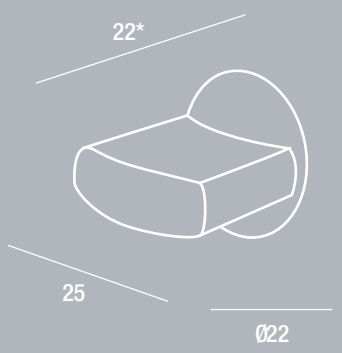

Finiture Finishings	Eps Epoxy Coatings	Applicazioni Applications
G104	E1	
G115	E9	

PO 369 Z

Design
Marelli e Molteni

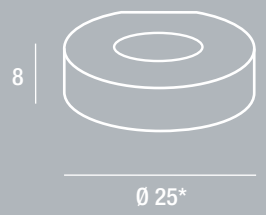

Finiture Finishings	Eps Epoxy Coatings	Applicazioni Applications
G104	E1	
G171	E9	

PO 438 Z

Design
Klaus Bergen

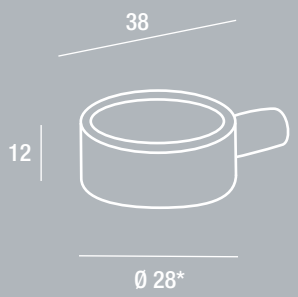

Finiture Finishings	Eps Epoxy Coatings	Applicazioni Applications
G171	E1	
	E9	

PO 443 Z

Design
Klaus Bergen

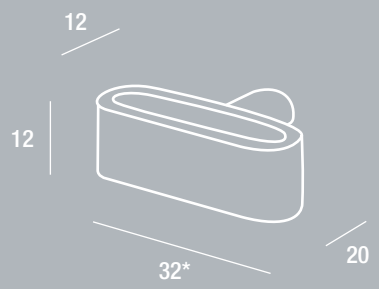

Finiture Finishings	Eps Epoxy Coatings	Applicazioni Applications
G171	E1	
	E9	

PO 388 Z

Design
Marelli e Molteni

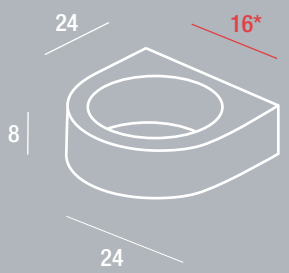

Finiture Finishings	Eps Epoxy Coatings	Applicazioni Applications
G104	E1	
G171	E9	

PO 401 A

Design
Marelli e Molteni

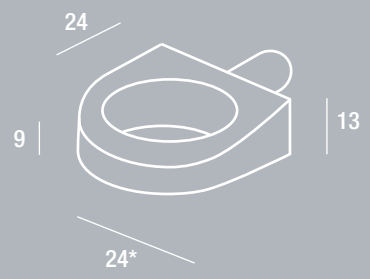

Finiture Finishings	Eps Epoxy Coatings	Applicazioni Applications
A14		

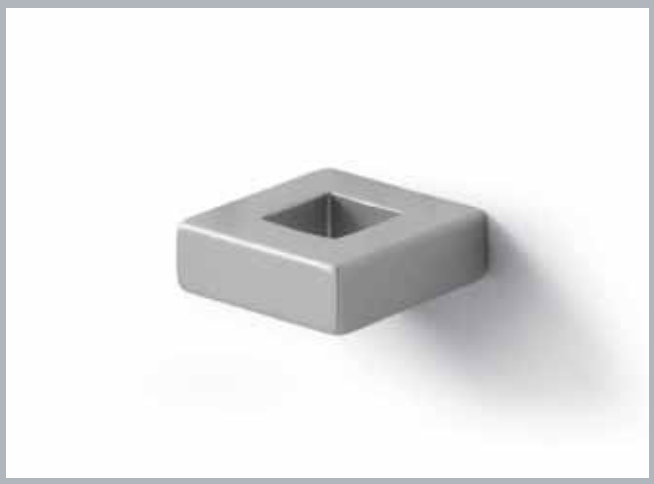

PO 370 Z

Design
Marelli e Molteni

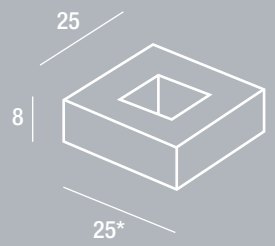

Finiture Finishings	Eps Epoxy Coatings	Applicazioni Applications
G104	E1	
G171	E9	

PO 389 Z

Design
Marelli e Molteni

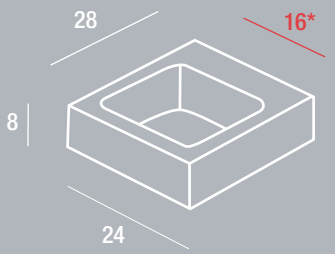

Finiture Finishings	Eps Epoxy Coatings	Applicazioni Applications
G104	E1	
G171	E9	

PO 364 Z

Design
Marelli e Molteni

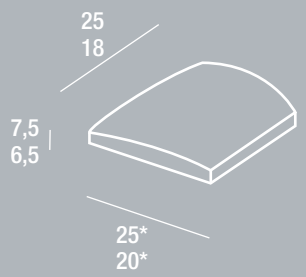

Finiture Finishings	Eps Epoxy Coatings	Applicazioni Applications
G104	E1	
G115	E9	

PO 333 Z

Design
Marelli e Molteni

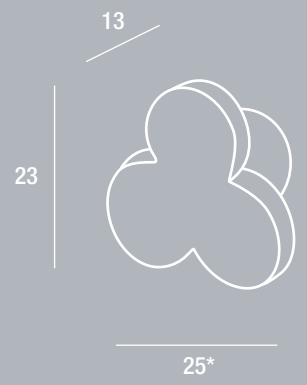

Finiture Finishings	Eps Epoxy Coatings	Applicazioni Applications
G104	E1	
G115	E9	

PO 392 Z

Design
Marelli e Molteni

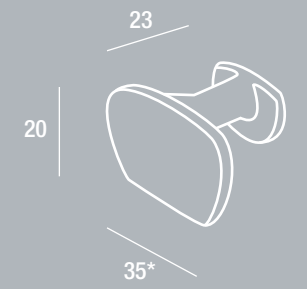

Finiture Finishings	Eps Epoxy Coatings	Applicazioni Applications
G104	E1	
G115	E9	

PO 327 Z

Design
CRP

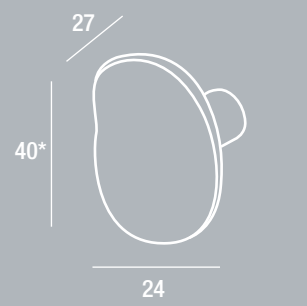

Finiture Finishings	Eps Epoxy Coatings	Applicazioni Applications
G104	E1	
G115	E9	

PO 331 Z

Design
Marelli e Molteni

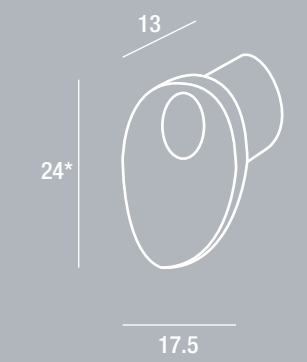

Finiture Finishings	Eps Epoxy Coatings	Applicazioni Applications
G104	E1	
G115	E9	

PO 324 Z

Design
Marelli e Molteni

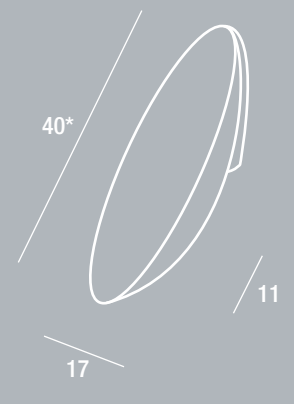

Finiture Finishings	Eps Epoxy Coatings	Applicazioni Applications
G104	E1	
G115	E9	

PO 415 Z

Design
CRP

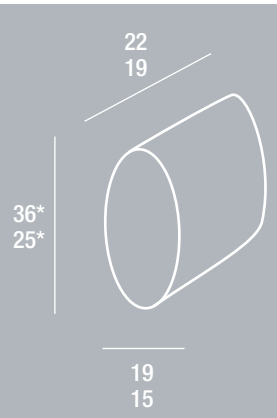

Finiture Finishings	Eps Epoxy Coatings	Applicazioni Applications
G104	E1	
G115	E9	

PO 318 Z

Design
Marelli e Molteni

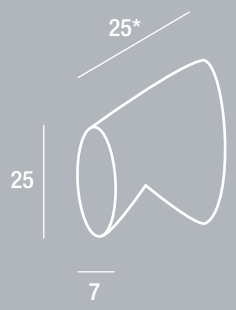

Finiture Finishings	Eps Epoxy Coatings	Applicazioni Applications
G104	E1	
G115	E9	

PO 271 Z

Design
CRP

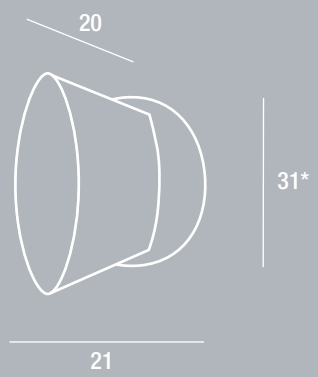

Finiture Finishings	Eps Epoxy Coatings	Applicazioni Applications
G104	E1	
G115	E9	

PO 297 Z

Design
CRP

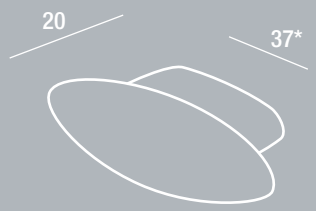

Finiture Finishings	Eps Epoxy Coatings	Applicazioni Applications
G104	E1	
G115	E9	
U1		

PO 373 Z

Design
CRP

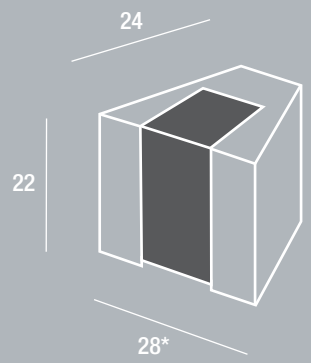

Finiture Finishings	Eps Epoxy Coatings	Applicazioni Applications
G104	E1	L1
G115	E9	L2

PO 373 Z

Design
CRP

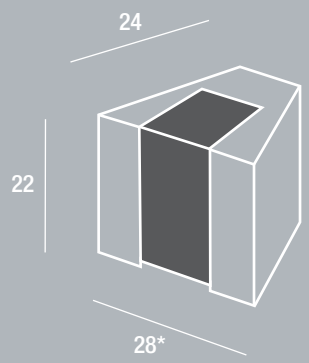

Finiture Finishings	Eps Epoxy Coatings	Applicazioni Applications
G104	E1	A10
G115	E9	

PO 425 Z

Design
Marelli e Molteni

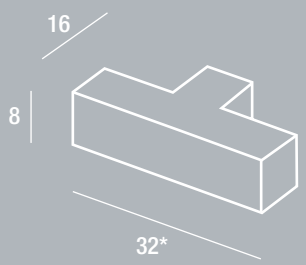

Finiture Finishings	Eps Epoxy Coatings	Applicazioni Applications
G104	E1	
G115	E9	

PO 430 Z

Design
Marelli e Molteni

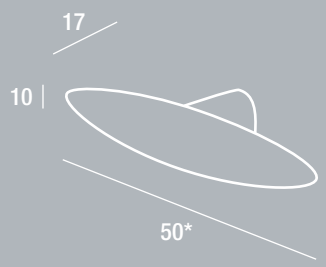

Finiture Finishings	Eps Epoxy Coatings	Applicazioni Applications
G104	E1	
G115	E9	

ciondoli e chiavi . pendants and keys

CI 189 Z

Design	Finiture Finishings	Eps Epoxy Coatings	Applicazioni Applications
Lino Codato	G104	E1	
	G115	E9	

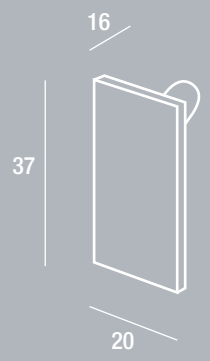

CI 187 Z

Design	Finiture Finishings	Eps Epoxy Coatings	Applicazioni Applications
Giuseppe Bavuso	G104	E1	
	G115	E9	

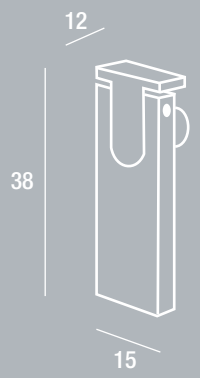

CI 183 Z

Design	Finiture Finishings	Eps Epoxy Coatings	Applicazioni Applications
Giuseppe Bavuso	G104	E1	
	G115	E9	

CI 181 Z

Design	Finiture Finishings	Eps Epoxy Coatings	Applicazioni Applications
Giuseppe Bavuso	G104	E1	
	G115	E9	

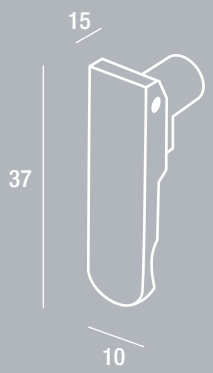

CY 160 Z

Design
Giuseppe Bavuso

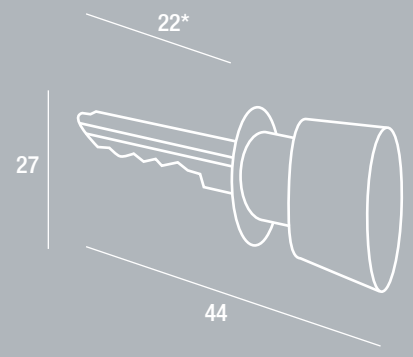

Finiture Finishings	Eps Epoxy Coatings	Applicazioni Applications
G104	E1	
G115	E9	

CY 162 Z

Design
Giuseppe Bavuso

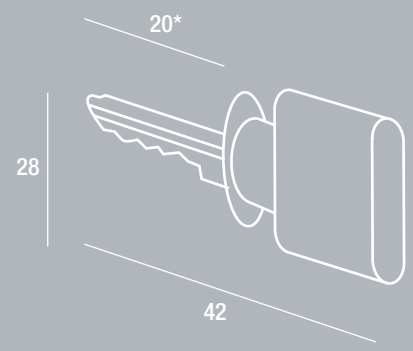

Finiture Finishings	Eps Epoxy Coatings	Applicazioni Applications
G104	E1	
G115	E9	

CY 157 Z

Design
CRP

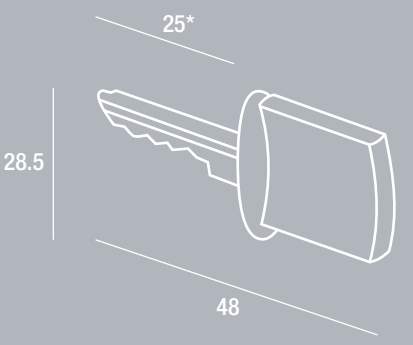

Finiture Finishings	Eps Epoxy Coatings	Applicazioni Applications
G104	E1	
G115	E9	

CY 146 Z

Design
CRP

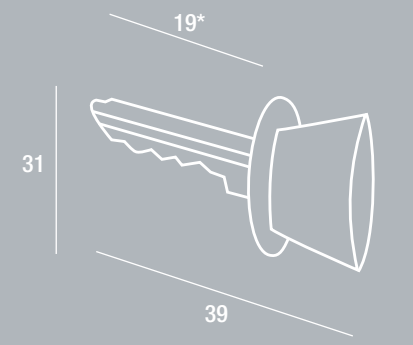

Finiture Finishings	Eps Epoxy Coatings	Applicazioni Applications
G104	E1	
G115	E9	

CY 119 Z

Design CRP	Finiture Finishings	Eps Epoxy Coatings	Applicazioni Applications
	G104	E1	
	G115	E9	

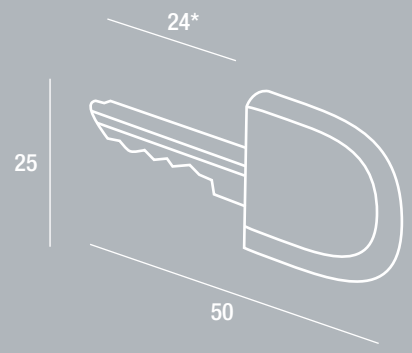

CY 155 F

Design CRP	Finiture Finishings	Eps Epoxy Coatings	Applicazioni Applications
	U1		

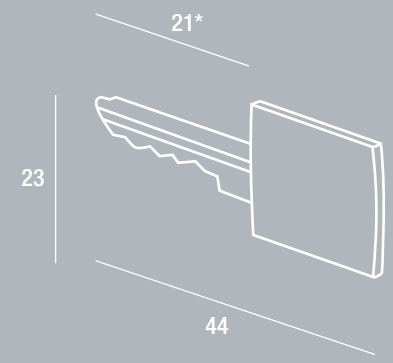

CY 149 Z

Design CRP	Finiture Finishings	Eps Epoxy Coatings	Applicazioni Applications
	G104	E1	U1
	G115		

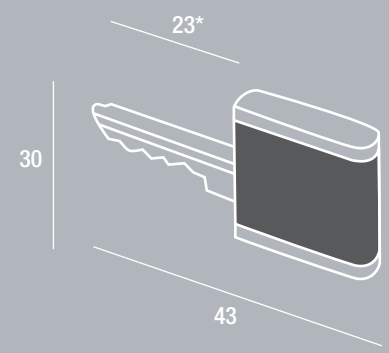

CF 114 Z

Design CRP	Finiture Finishings	Eps Epoxy Coatings	Applicazioni Applications
	G104	E1	

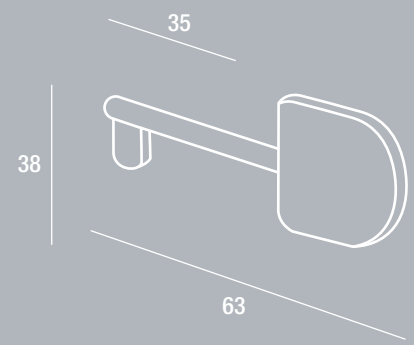

I modelli Pamar sono protetti da brevetto internazionale. La contraffazione sarà perseguita a termine di legge.

International patents have been deposited for the Pamar models. Imitations will be punished by law.

Die modelle Pamar sind durch internationales Patent geschützt. Fälschungen sind strafbar und werden gesetzmäßig verfolgt.

Les modèles Pamar sont couverts par un brevet international. La contrefaçon sera poursuivie aux termes de la loi.

Los modelos Pamar están protegidospor patente internacional. La imitactión será demandada según las leyes.

INFORMAZIONI TECNICHE

- Le misure in bianco sono le dimensioni esterne
- Le misure in rosso sono l'interasse
- Le misure con asterisco * sono il codice del prodotto
- Le parti in grigio scuro nei disegni indicano applicazioni di differenti finiture.

AVVERTENZA

Pamar SpA si riserva la facoltà di modificare le caratteristiche tecniche degli elementi illustrati nel presente catalogo in qualunque momento che si ritiene necessario.
Per ragioni tecniche le tonalità dei colori rappresentati a catalogo possono differire dagli originali.

TECHNICAL INFORMATION

- White measurements refer to external dimensions
- Red measurements refer to inter-axial hole distance
- Measurements with asterisk * refer to the article
- The dark grey shading in the drawings possible applications of different materials.

ATTENTION

Pamar SpA reserves the right to change technical specifications of products illustrated in this catalogue at any time it deems necessary.
Colour variations in the catalogue compared with the original colours are possible due to technical reasons.

AD **Gordon Guillaumier**
grafica / graphic **GB studio**

foto / photo **Riccardo Bianchi**
Studio BBM
Ramak Fazel (pagina 3_5)

testi / copy **Alam**

cover artwork **Giuseppe Perin**

impianti e stampa / color separation and print **Grafiche Biessezeta**

finito di stampare nel mese di gennaio 2010

ACRILICI • ACRYLIC

A1 A103 ACRILICO BIANCO • ACRYLIC WHITE
A1 A111 ACRILICO MADREPERLA • ACRYLIC MOTHER OF PEARL
A1 A123 ACRILICO NERO • ACRYLIC BLACK

METACRILATI TRASPARENTI LUCIDI • BRIGHT TRANSPARENT METACRILATI

A7 A149 METACRILATO TRASPARENTE ARANCIO LUCIDO • METACRILATO TRANSPARENT BRIGHT ORANGE
A7 A150 METACRILATO TRASPARENTE BLU LUCIDO • METACRILATO TRANSPARENT BRIGHT BLUE
A7 A151 METACRILATO TRASPARENTE • METACRILATO TRANSPARENT
A7 A152 METACRILATO TRASPARENTE VERDE LUCIDO • METACRILATO TRANSPARENT BRIGHT GREEN
A7 A158 METACRILATO TRASPARENTE GIALLO LUCIDO • METACRILATO TRANSPARENT BRIGHT YELLOW

METACRILATI TRASPARENTI OPACHI • MAT TRANSPARENT METACRILATI

A8 A153 METACRILATO TRASPARENTE ARANCIO OPACO • METACRILATO TRANSPARENT MAT ORANGE
A8 A154 METACRILATO TRASPARENTE BLU OPACO • METACRILATO TRANSPARENT MAT BLUE
A8 A155 METACRILATO GHIACCIO • METACRILATO ICE
A8 A156 METACRILATO TRASPARENTE VERDE OPACO • METACRILATO TRANSPARENT MAT GREEN
A8 A159 METACRILATO TRASPARENTE GIALLO OPACO • METACRILATO TRANSPARENT MAT YELLOW

POLIACRILICI TRASPARENTI SABBIATI • SANDBLASTED TRANSPARENT POLIACRILICI

A9 A162 POLIACRILICO TRASPARENTE ARANCIO SABBIATO • POLIACRILICO TRANSPARENT SANDBLASTED ORANGE
A9 A163 POLIACRILICO TRASPARENTE BLU SABBIATO • POLIACRILICO TRANSPARENT SANDBLASTED BLUE
A9 A164 POLIACRILICO TRASPARENTE GIALLO SABBIATO • POLIACRILICO TRANSPARENT SANDBLASTED YELLOW
A9 A165 POLIACRILICO TRASPARENTE SABBIATO • POLIACRILICO TRANSPARENT SANDBLASTED
A9 A166 POLIACRILICO TRASPARENTE VERDE SABBIATO • POLIACRILICO TRANSPARENT SANDBLASTED GREEN

METACRILATI SABBIATI • SANDBLASTED METACRILATI

A10 A160 METACRILATO SABBIATO OPALE • METACRILATO SANDBLASTED OPAL
A10 A167 METACRILATO SABBIATO ARANCIO OPALE • METACRILATO SANDBLASTED OPAL ORANGE
A10 A168 METACRILATO SABBIATO BLU OPALE • METACRILATO SANDBLASTED OPAL BLUE
A10 A171 METACRILATO SABBIATO GIALLO OPALE • METACRILATO SANDBLASTED OPAL YELLOW
A10 A172 METACRILATO SABBIATO VERDE OPALE • METACRILATO SANDBLASTED OPAL GREEN

METACRILATI TRASPARENTI TEXTURE • TEXTURE TRANSPARENT METACRILATI

A12 A182 METACRILATO TRASPARENTE ARANCIO TEXTURE • METACRILATO TRANSPARENT TEXTURE ORANGE
A12 A183 METACRILATO TRASPARENTE BLU TEXTURE • METACRILATO TRANSPARENT TEXTURE BLUE
A12 A184 METACRILATO TRASPARENTE TEXTURE • METACRILATO TRANSPARENT TEXTURE
A12 A185 METACRILATO TRASPARENTE VERDE TEXTURE • METACRILATO TRANSPARENT TEXTURE GREEN
A12 A186 METACRILATO TRASPARENTE GIALLO TEXTURE • METACRILATO TRANSPARENT TEXTURE YELLOW

SURLYN TRASPARENTI TEXTURE • TEXTURE TRANSPARENT SURLYN

A13 A190 SURLYN TRASPARENTE TEXTURE • SURLYN TRANSPARENT TEXTURE
A13 A191 SURLYN TRASPARENTE ARANCIO TEXTURE • SURLYN TRANSPARENT TEXTURE ORANGE
A13 A192 SURLYN TRASPARENTE BLU TEXTURE • SURLYN TRANSPARENT TEXTURE BLUE
A13 A193 SURLYN TRASPARENTE VERDE TEXTURE • SURLYN TRANSPARENT TEXTURE GREEN
A13 A194 SURLYN TRASPARENTE GIALLO TEXTURE • SURLYN TRANSPARENT TEXTURE YELLOW
A13 A217 SURLYN TRASPARENTE GRIGIO FUME' TEXTURE • SURLYN TRANSPARENT TEXTURE FUME' GREY

POLICARBONATI TRASPARENTI TEXTURE • TEXTURE TRANSPARENT POLICARBONATI

A14 A195 POLICARBONATO TRASPARENTE TEXTURE • POLICARBONATO TRANSPARENT TEXTURE

METACRILATI ANTIURTO INFRANGIBILI OPACHI • MAT SHOCK PROOF UNBREAKABLE METACRILATI

A17 A207 METACRILATO ANTIURTO INFRANGIBILE OPACO • SHOCK PROOF UNBREAKABLE METACRILATO MAT

METACRILATI ANTIURTO INFRANGIBILI TEXTURE • TEXTURE SHOCK PROOF UNBREAKABLE METACRILATI

A19 A215 METACRILATO ANTIURTO INFRANGIBILE TEXTURE • SHOCK PROOF UNBREAKABLE METACRILATO TEXTURE

CRISTALLI TRASPARENTI • TRANSPARENT CRYSTAL

C1 C101 CRISTALLO TRASPARENTE • TRANSPARENT CRYSTAL

CRISTALLI COLORATI • COLOURED CRYSTAL

C2 C111 CRISTALLO FUME' • BLACK DIAMOND CRYSTAL
C2 C112 CRISTALLO JET HEMATITE • JET HEMATITE CRYSTAL
C2 C113 CRISTALLO BRONZO • SMOKED TOPAZ CRYSTAL

EPS METALLIZZATI OPACHI - EPS SEMPLICI • MAT METALLIZED EPS - SIMPLE EPS

E1 E101 METALLIZZATO ALLUMINIO OPACO • MAT METALLIZED ALUMINIUM
E1 E103 METALLIZZATO ARGENTO MAT • MAT METALLIZED SILVER
E1 E106 METALLIZZATO FERRO VECCHIO OPACO • MAT METALLIZED OLD IRON

E1	**E117**	BIANCO LUCIDO • BRIGHT WHITE
E1	**E118**	BIANCO OPACO • MAT WHITE
E1	**E129**	NERO LUCIDO • BRIGHT BLACK
E1	**E130**	NERO OPACO • MAT BLACK
E1	**E213**	MOKA OPACO • MAT MOKA
E1	**EZ004**	METALLIZZATO ZINCO OPACO • MAT METALLIZED ZINC

EPS METALLIZZATI SPECIALI OPACHI • SPECIAL MAT METALLIZED EPS

E9	**E219**	METALLIZZATO ACCIAIO OPACO • MAT METALLIZED STAINLESS STEEL
E9	**E221**	METALLIZZATO BRONZO OPACO • MAT METALLIZED BRONZE

EPS CON FONDO • EPS WITH PRIMER

E10	**E215**	METALLIZZATO ALLUMINIO OPACO CON FONDO • MAT METALLIZED ALUMINIUM WITH PRIMER
E10	**E216**	METALLIZZATO ARGENTO MAT CON FONDO • MAT METALLIZED SILVER WITH PRIMER
E10	**E228**	NERO OPACO CON FONDO • MAT BLACK WITH PRIMER
E10	**E229**	BIANCO OPACO CON FONDO • MAT WHITE WITH PRIMER
E10	**EZ002**	METALLIZZATO ZINCO OPACO CON FONDO • MAT METALLIZED ZINC WITH PRIMER

EPS METALLIZZATI SPECIALI OPACHI CON FONDO • SPECIAL MAT METALLIZED EPS WITH PRIMER

E11	**E230**	METALLIZZATO ACCIAIO OPACO CON FONDO • MAT METALLIZED STAINLESS STEEL WITH PRIMER
E11	**EB040**	METALLIZZATO BRONZO OPACO CON FONDO • MAT METALLIZED BRONZE WITH PRIMER

GALVANICHE BASE • BASIC GALVANIC

G1	**G101**	BRONZO SFUMATO LUCIDO • BRIGHT SHADED BRONZE
G1	**G102**	BRONZO SFUMATO OPACO • MAT SHADED BRONZE
	G104	CROMATO LUCIDO • BRIGHT CHROMIUM PLATED
	G105	NICHEL NERO LUCIDO • BRIGHT BLACK NICKEL
	G107	OTTONATO LUCIDO • BRIGHT BRASS PLATED
	G158	NICHELATO LUCIDO • BRIGHT NICKEL

GALVANICHE SEMPLICI • SIMPLE GALVANIC

G2	**G113**	BRONZO SATINATO LUCIDO • BRIGHT SATIN BRONZE
	G115	NICHEL SATINATO LUCIDO • BRIGHT SATIN NICKEL
	G119	OTTONE LUCIDATO • POLISHED BRASS
	G174	RAME BRONZATO SATINATO LUCIDO • BRIGHT SATIN BRONZED COPPER
	G176	PELTRO SATINATO OPACO • MAT SATIN PEWTER
	GP008	PELTRO SFUMATO OPACO • MAT SHADED PEWTER

GALVANICHE MEDIE • MEDIUM GALVANIC

G3	**G124**	NICHEL LUCIDO SATINATO VERNICIATO LUCIDO • SHINY SATIN NICKEL+BRIGHT PAINT
G3	**GN020**	NICHEL LUCIDO SATINATO CON VERNICE TRASPARENTE • BRIGHT SATIN NICKEL WITH BRIGHT PAINT

GALVANICHE ALTE • TOP GALVANIC

G5	**G140**	BAGNO ORO 24 KT • GOLD PLATED 24 KT
	G139	ARGENTO VECCHIO OPACO • MAT OLD SILVER
	GR024	RAME BRONZATO GRAFFIATO PERLATO • PEARLED SCRATCHED BRONZED COPPER

GALVANICHE MAT • MAT GALVANIC

G9	**G150**	NICHEL MAT • MAT NICKEL
G9	**G172**	CROMO MAT • MAT CHROME

GALVANICHE MAT SATINATE • SATIN MAT GALVANIC

G11	**G171**	NICHEL MAT SATINATO • SATIN MAT NICKEL

OSSIDAZIONE • OXIDATION

I1	**I101**	ALLUMINIO ANODIZZATO ZERO CHIMICO • ZERO CHEMICAL ANODIZED ALUMINIUM

OSSIDAZIONE SATINATA/BRILL • SATIN/BRILL OXIDATION

I2	**IA051**	ALLUMINIO ANODIZZATO LUCIDO BRILL • BRIGHT BRILL ANODIZED ALUMINIUM

LEGNO • WOOD

L1	**L101**	LEGNO ROVERE • OAK WOOD
L1	**L102**	LEGNO CILIEGIO • CHERRY WOOD
L1	**L103**	LEGNO NOCE • WALNUT WOOD
L1	**L104**	LEGNO FAGGIO • BEECH WOOD
L1	**L105**	LEGNO ACERO • MAPLE WOOD

LEGNO SPECIALE • SPECIAL WOOD

L2	**L106**	LEGNO NOCE CANALETTO • CANALETTO WALNUT WOOD
L2	**L110**	LEGNO ROVERE PANGA • OAK PANGA WOOD
L2	**L111**	LEGNO ROVERE SBIANCATO • BLEACHED OAK WOOD

L2 L113 LEGNO NOCE NAZIONALE • NATIONAL WALNUT WOOD
L2 L114 LEGNO PALISSANDRO • ROSEWOOD
L2 W0431 LEGNO ROVERE MORO • DARK OAK WOOD

LEGNO IMPIALLACCIATO • VENEER WOOD
L4 L115 SIMIL LEGNO ROVERE GRIGIO • GREY OAK SIMIL WOOD
L4 L116 SIMIL LEGNO ROVERE MORO • DARK OAK SIMIL WOOD

CERAMICA • CERAMICS
N1 N101 CERAMICA BIANCO LUCIDO • BRIGHT WHITE CERAMICS
N1 N102 CERAMICA BIANCO OPACO • MAT WHITE CERAMICS
N1 N103 CERAMICA NERO OPACO • MAT BLACK CERAMICS
N1 N105 CERAMICA NERO LUCIDO • BRIGHT BLACK CERAMICS

GOMMA • RUBBER
01 0102 GOMMA NERA • BLACK RUBBER
01 0104 GOMMA GIALLA • YELLOW RUBBER
01 0105 GOMMA GRIGIA • GREY RUBBER
01 0107 GOMMA ROSSA • RED RUBBER
01 0108 GOMMA VERDE ACQUA • GREEN WATER RUBBER
01 0110 GOMMA ARANCIO • ORANGE RUBBER
01 0111 GOMMA MOKA • MOKA RUBBER
01 OA069 GOMMA ARAGOSTA • LOBSTER RUBBER
01 OB055 GOMMA BLU NOTTE • NIGHT BLUE RUBBER
01 OG024 GOMMA GIALLO CEDRO • CITRON YELLOW RUBBER
01 OL009 GOMMA LAVANDA • LAVANDER RUBBER
01 OV029 GOMMA VERDE PRATO • GRASS GREEN RUBBER

RESINE SEMPLICI • SIMPLE RESIN
R1 R101 RESINA FUME' • FUME' RESIN
R1 R102 RESINA FUME' OPACO • MAT FUME' RESIN
R1 R103 RESINA GHIACCIO • ICE RESIN
R1 R114 RESINA TRASPARENTE • TRANSPARENT RESIN
R1 R156 RESINA BIANCO OPACO • MAT WHITE RESIN
R1 R157 RESINA NERO OPACO • MAT BLACK RESIN
R1 R167 RESINA NERO LUCIDO • BRIGHT BLACK RESIN
R1 R168 RESINA BIANCO LUCIDO • BRIGHT WHITE RESIN

CUOIO • STRONGER LEATHER
U1 U101 CUOIO ROSSO BULGARO • RED RUSSIAN STRONGER LEATHER
U1 U102 CUOIO NERO • BLACK STRONGER LEATHER
U1 U104 CUOIO THE • TEA STRONGER LEATHER
U1 U111 CUOIO CAFFE' • COFFEE STRONGER LEATHER
U1 U122 CUOIO NATURALE INVECCHIATO • OLD NATURAL STRONGER LEATHER
U1 U125 CUOIO BIANCO • WHITE STRONGER LEATHER

CORDONCINO IN CUOIO • STRONGER LEATHER TWIST
U4 U118 CORDONCINO IN CUOIO NERO • BLACK STRONGER LEATHER TWIST
U4 U119 CORDONCINO IN CUOIO NATURALE • NATURAL STRONGER LEATHER TWIST
U4 U120 CORDONCINO IN CUOIO BORDO' • BORDEAUX STRONGER LEATHER TWIST
U4 U121 CORDONCINO IN CUOIO MARRONE • BROWN STRONGER LEATHER TWIST

CUOIO CON BORDO • STRONGER LEATHER WITH BORDER
U5 UA025 CUOIO AVORIO CON BORDO NERO • IVORY STRONGER LEATHER WITH BLACK BORDER
U5 UT003 CUOIO TESTA DI MORO CON BORDO AVORIO • DARK BROWN STRONGER LEATHER WITH IVORY BORDER

VETRO A SPECCHIO • MIRRORED GLASS
V5 V124 VETRO SPECCHIATO BIANCO • WHITE MIRRORED GLASS
V5 V125 VETRO SPECCHIATO BRONZO • BRONZE MIRRORED GLASS
V5 V126 VETRO SPECCHIATO GRIGIO • GREY MIRRORED GLASS

VETRO EXTRACHIARO • EXTRALIGHT GLASS
V6 VT050 VETRO EXTRACHIARO TRASPARENTE • EXTRALIGHT TRANSPARENT GLASS

VETRO SAGOMATO RIGATO • SHAPED SCORED GLASS
V7 VA053 VETRO SAGOMATO RIGATO AMBRA • SHAPED SCORED AMBER GLASS
V5 VF005 VETRO SAGOMATO RIGATO FUME' • SHAPED SCORED FUME' GLASS

ACCIAIO INOX SATINATO • INOX SATIN STAINLESS STEEL
X1 X101 ACCIAIO INOX SATINATO • SATIN INOX STAINLESS STEEL

INDICE • INDEX

CHIAVI • KEYS

CF 114 pagina 158
CY 119 pagina 158
CY 146 pagina 157
CY 149 pagina 158
CY 155 pagina 158
CY 157 pagina 157
CY 160 pagina 157
CY 162 pagina 157

CIONDOLI • PENDANTS

CI 181 pagina 156
CI 183 pagina 156
CI 187 pagina 156
CI 189 pagina 156
CI 224 pagina 34
CI 225 pagina 35

MANIGLIE • HANDLES

MN 183/8 pagina 48
MN 240 pagina 48
MN 249 pagina 70
MN 289 pagina 56
MN 295 pagina 110
MN 321 pagina 110
MN 372 pagina 123
MN 395 pagina 100
MN 400 pagina 124
MN 435 pagina 94
MN 452 pagina 49
MN 458 pagina 51
MN 459 pagina 71
MN 469 pagina 111
MN 475 pagina 58
MN 481 pagina 70
MN 485 pagina 63
MN 491 pagina 58
MN 492 pagina 63
MN 496 pagina 63
MN 503 pagina 110
MN 507 pagina 71
MN 536 pagina 65
MN 553 pagina 72
MN 557 pagina 49
MN 559 pagina 66
MN 563 pagina 58
MN 566 pagina 88
MN 569 pagina 123
MN 570 pagina 62
MN 577 pagina 65
MN 580 pagina 71
MN 582 pagina 99
MN 590 pagina 49
MN 591 pagina 88
MN 597 pagina 67
MN 598 pagina 60
MN 606 pagina 100
MN 608 pagina 66
MN 610 pagina 64
MN 611 pagina 63
MN 616 pagina 87
MN 621 pagina 57
MN 623 pagina 64
MN 628 pagina 54
MN 632 pagina 58
MN 633 pagina 124
MN 634 pagina 124
MN 637 pagina 64
MN 640 pagina 97
MN 641 pagina 84
MN 644 pagina 65
MN 646 pagina 83
MN 647 pagina 71
MN 650 pagina 51
MN 651 pagina 54
MN 652 pagina 54
MN 653 pagina 52
MN 655 pagina 123
MN 661 pagina 64
MN 662 pagina 66
MN 667 pagina 72
MN 668 pagina 60
MN 669 pagina 67
MN 670 pagina 61
MN 671 pagina 61
MN 674 pagina 69
MN 678 pagina 56
MN 679 pagina 53
MN 680 pagina 59
MN 682 pagina 68
MN 685 pagina 53
MN 686 pagina 69
MN 687 pagina 99
MN 689 pagina 114
MN 692 pagina 61
MN 693 pagina 67
MN 695 pagina 93
MN 699 pagina 66
MN 700 pagina 47
MN 701 pagina 99
MN 703 pagina 50
MN 704 pagina 114
MN 706 pagina 69
MN 707 pagina 60
MN 710 pagina 67
MN 713 pagina 113
MN 714 pagina 112
MN 721 pagina 109
MN 729 pagina 112
MN 732 pagina 115
MN 734 pagina 46
MN 735 pagina 59
MN 737 pagina 59
MN 738 pagina 86
MN 739 pagina 89
MN 743 pagina 115
MN 744 pagina 116
MN 747 pagina 95
MN 748 pagina 116
MN 750 pagina 116
MN 751 pagina 85
MN 752 pagina 99
MN 753 pagina 89
MN 761 pagina 122
MN 762 pagina 122
MN 763 pagina 122
MN 768 pagina 84
MN 769 pagina 86
MN 770 pagina 65
MN 779 pagina 62
MN 780 pagina 62
MN 786 pagina 62
MN 788 pagina 98
MN 789 pagina 60
MN 791 pagina 45
MN 792 pagina 88
MN 793 pagina 92
MN 797 pagina 89
MN 798 pagina 120
MN 799 pagina 120
MN 800 pagina 113
MN 802 pagina 113
MN 803 pagina 121
MN 804 pagina 50
MN 805 pagina 89
MN 806 pagina 87
MN 807 pagina 107
MN 808 pagina 107
MN 809 pagina 115
MN 810 pagina 85
MN 811 pagina 85
MN 814 pagina 108
MN 815 pagina 108
MN 824 pagina 97
MN 832 pagina 68
MN 833 pagina 68
MN 836 pagina 42
MN 837 pagina 45
MN 857 pagina 55
MN 860 pagina 55
MN 861 pagina 98
MN 862 pagina 98
MN 867 pagina 95
MN 868 pagina 97
MN 869 pagina 72
MN 870 pagina 72
MN 875 pagina 121
MN 876 pagina 90
MN 877 pagina 90
MN 878 pagina 90
MN 880 pagina 95
MN 882 pagina 43
MN 883 pagina 43
MN 886 pagina 83
MN 887 pagina 92
MN 889 pagina 88
MN 890 pagina 92
MN 891 pagina 93
MN 897 pagina 111
MN 898 pagina 111
MN 900 pagina 91
MN 904 pagina 56
MN 905 pagina 68
MN 907 pagina 43
MN 909 pagina 57
MN 910 pagina 123
MN 912 pagina 57
MN 918 pagina 111
MN 920 pagina 109
MN 921 pagina 109
MN 922 pagina 110
MN 926 pagina 114
MN 932 pagina 91
MN 934 pagina 44
MN 935 pagina 44
MN 940 pagina 47
MN 941 pagina 48
MN 943 pagina 57
MN 946 pagina 96
MN 948 pagina 48
MN 949 pagina 94
MN 950 pagina 91
MN 951 pagina 52
MN 952 pagina 51
MN 953 pagina 94
MN 954 pagina 46
MN 955 pagina 52
MN 956 pagina 94
MN 958 pagina 93
MN 959 pagina 108
MN 960 pagina 122
MN 962 pagina 84
MN 967 pagina 69
MN 968 pagina 85
MN 969 pagina 90
MN 970 pagina 70
MN 971 pagina 93
MN 972 pagina 87
MN 977 pagina 70
MN 979 pagina 70
MN 982 pagina 91
MN 990 pagina 87
MN 1000 pagina 42
MN 1001 pagina 115
MN 1003 pagina 96
MN 1004 pagina 96
MN 1005 pagina 95
MN 1006 pagina 96
MN 1010 pagina 108
MN 1018 pagina 81
MN 1019 pagina 116
MN 1025 pagina 107
MN 1026 pagina 106
MN 1027 pagina 106
MN 1031 pagina 106
MN 1032 pagina 107
MN 1033 pagina 41
MN 1034 pagina 83
MN 1042 pagina 41
MN 1044 pagina 41
MN 1045 pagina 40
MN 1046 pagina 82
MN 1047 pagina 40
MN 1048 pagina 40
MN 1051 pagina 81
MN 1060 pagina 82
MN 1061 pagina 41
MN 1071 pagina 44
MN 1082 pagina 24
MN 1086 pagina 121
MN 1087 pagina 38
MN 1088 pagina 40
MN 1089 pagina 121
MN 1096 pagina 128
MN 1097 pagina 128
MN 1098 pagina 129
MN 1099 pagina 129
MN 1100 pagina 129
MN 1106 pagina 105
MN 1107 pagina 80
MN 1124 pagina 79
MN 1126 pagina 81
MN 1129 pagina 39
MN 1132 pagina 104
MN 1133 pagina 77
MN 1139 pagina 77
MN 1142 pagina 112
MN 1143 pagina 79
MN 1145 pagina 39
MN 1150 pagina 39
MN 1157 pagina 104
MN 1158 pagina 128
MN 1160 pagina 105
MN 1161 pagina 105
MN 1166 pagina 39
MN 1167 pagina 105
MN 1172 pagina 79
MN 1173 pagina 79
MN 2001 pagina 104
MN 2006 pagina 80
MN 2007 pagina 80
MN 2019 pagina 16
MN 2021 pagina 25
MN 2024 pagina 76
MN 2025 pagina 32
MN 2026 pagina 30
MN 2027 pagina 76
MN 2029 pagina 77
MN 2030 pagina 77
MN 2032 pagina 104
MN 2048 pagina 15
MN 2061 pagina 120
MN 2068 pagina 22
MN 2069 pagina 76
MN 2073 pagina 78
MN 2077 pagina 38
MN 2078 pagina 38
MN 2079 pagina 21

MN 2080 pagina 76
MN 2082 pagina 14
MN 2091 pagina 38
MN 2094 pagina 19
MN 2096 pagina 18
MN 2098 pagina 17
MN 2101 pagina 23
MN 2102 pagina 10
MN 2103 pagina 12
MN 2104 pagina 20
MN 2106 pagina 13
MN 2108 pagina 28
MN 2109 pagina 29
MN 2133 pagina 11

POMOLI • KNOBS

PO 3 pagina 140
PO 64 pagina 134
PO 179 pagina 134
PO 190 pagina 139
PO 207 pagina 139
PO 214 pagina 133
PO 217 pagina 139
PO 218 pagina 135
PO 225 pagina 140
PO 226 pagina 139
PO 271 pagina 152
PO 289 pagina 136
PO 290 pagina 136
PO 292 pagina 141
PO 295 pagina 133
PO 297 pagina 153
PO 300 pagina 136
PO 301 pagina 133
PO 309 pagina 148
PO 310 pagina 148
PO 313 pagina 146
PO 314 pagina 146
PO 318 pagina 152
PO 319 pagina 143
PO 323 pagina 147
PO 324 pagina 152
PO 325 pagina 145
PO 327 pagina 151
PO 331 pagina 151
PO 333 pagina 151
PO 336 pagina 148
PO 340 pagina 134
PO 341 pagina 140
PO 346 pagina 148
PO 351 pagina 146
PO 361 pagina 147
PO 362 pagina 147
PO 363 pagina 147
PO 364 pagina 150
PO 366 pagina 143
PO 369 pagina 149
PO 370 pagina 150
PO 371 pagina 146
PO 373 pagina 153
PO 374 pagina 137
PO 378 pagina 141
PO 388 pagina 149
PO 389 pagina 150
PO 392 pagina 151
PO 393 pagina 138
PO 395 pagina 138
PO 401 pagina 150
PO 403 pagina 144
PO 410 pagina 142
PO 414 pagina 137
PO 415 pagina 152
PO 416 pagina 143
PO 417 pagina 135
PO 418 pagina 135
PO 424 pagina 145
PO 425 pagina 153
PO 428 pagina 136
PO 430 pagina 154
PO 432 pagina 145
PO 433 pagina 145
PO 434 pagina 137
PO 435 pagina 137
PO 436 pagina 138
PO 437 pagina 143
PO 438 pagina 149
PO 439 pagina 142
PO 440 pagina 138
PO 443 pagina 149
PO 450 pagina 106
PO 451 pagina 144
PO 454 pagina 142
PO 456 pagina 142
PO 459 pagina 144
PO 464 pagina 141
PO 467 pagina 133
PO 473 pagina 132
PO 475 pagina 132
PO 2006 pagina 26
PO 2008 pagina 132
PO 2009 pagina 120
PO 2010 pagina 132
PO 2015 pagina 27